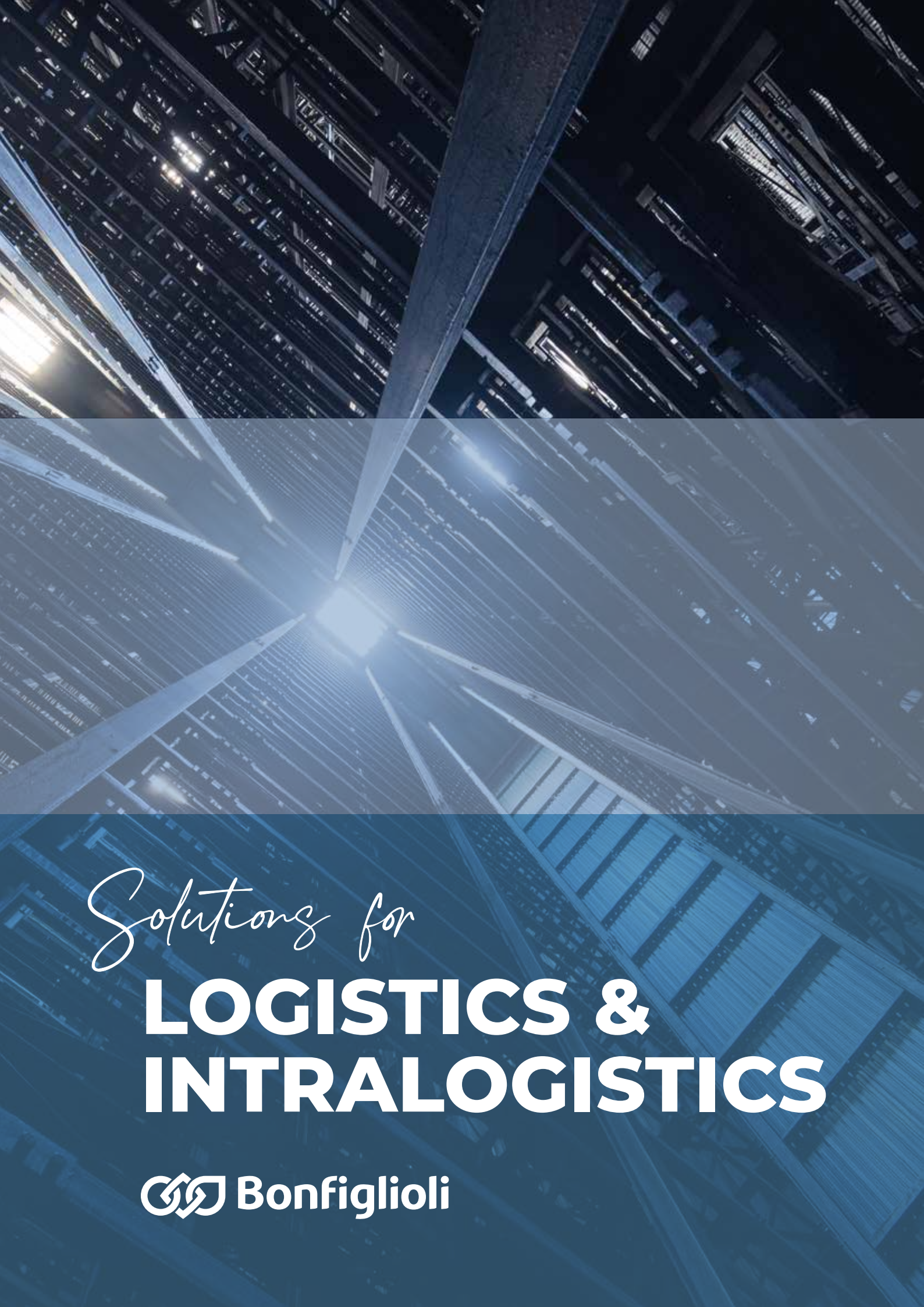

Solutions for

LOGISTICS & INTRALOGISTICS

Bonfiglioli

We engineer dreams

Solutions for LOGISTICS & INTRALOGISTICS

CONTENTS

LOGISTICS & INTRALOGISTICS **5**

WAREHOUSE & MATERIAL HANDLING **6**
Roller conveyors 8
Belt conveyors 9
Automatic storage 10
Forklifts 11
Warehousing trucks 12
Automatic guided vehicles 13

AIRPORT EQUIPMENT **14**
Tow tractors 16
Baggage claim conveyors 18

POSTEL & PARCEL EQUIPMENT **20**
Postal handling Solutions 22

ACCESS & AERIAL PLATFORMS **24**

CONVEYING **26**
Roller conveyors 28
Belt conveyors 29
Chain conveyors 30
Spiral conveyors 31

LOGISTICS & INDUSTRIAL CRANES **32**
Overhead cranes 34
Jib cranes 36

OUR GLOBAL PRESENCE **38**

Engineering Solutions

WWW.BONFIGLIOLI.COM

LOGISTICS & INTRALOGISTICS

WE HAVE THE RIGHT SOLUTIONS FOR ALL YOUR INTRALOGISTICS NEEDS!

More than ever, logistics & intralogistics are at the heart of today's world. From automatic storage systems to warehouse vehicles, all these machines play a key role in the smooth flow of materials. With years of experience in integrating systems and designing complete solutions for specific applications, Bonfiglioli can supply the right solutions to support its customers' growth in materials, transportation and storage technology. Efficiency, reliability, flexibility, loading capability and environmental compatibility are the pillars of the Bonfiglioli offer!

Solutions for

LOGISTICS & INTRALOGISTICS

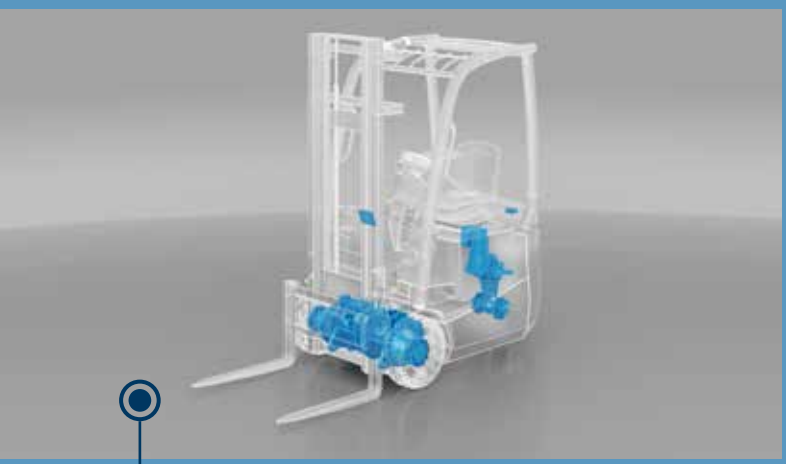

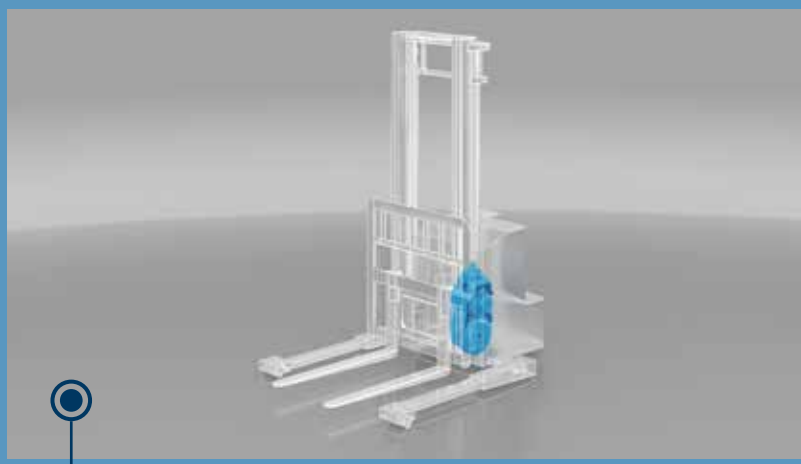

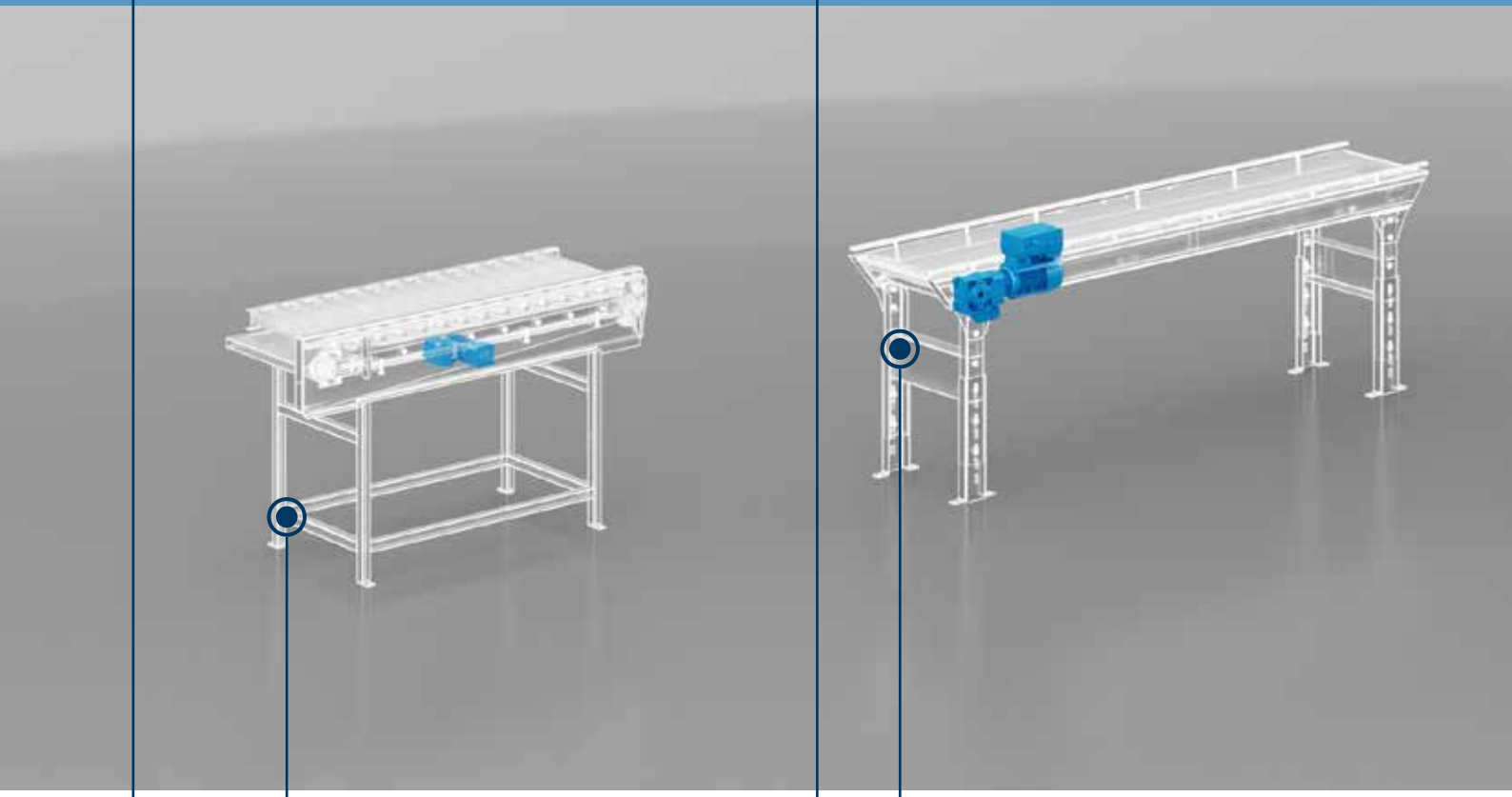

1 ROLLER CONVEYORS

2 BELT CONVEYORS

4 FORKLIFTS

5 REACH TRUCKS

6 **AMR/AGV**

3 **COMPACT AUTOMATIC WAREHOUSE**

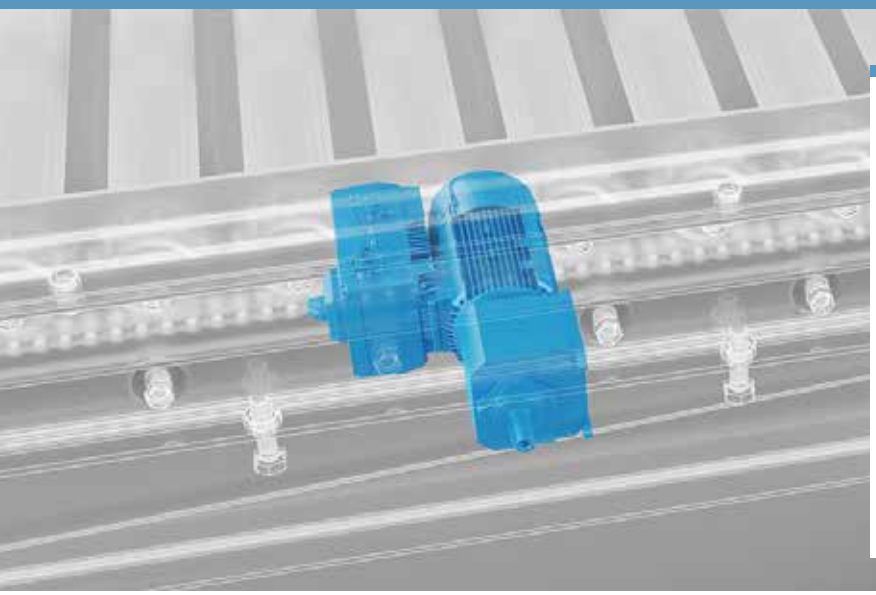

1

ROLLER CONVEYORS

Our solution consists of a complete drive transmission package, from the gearbox to the decentralized inverter. In roller conveyors, our range is based on coaxial gearbox or orthogonal gearboxes with bevel gear, always combined with our compact IE3 electric motor and the IP65 DGM-MPM inverter.

EVOX CP Series
Helical In-Line Gearbox

EVOX MXN Series
Asynchronous Motors

DGM-MPM Series
Decentralized Inverter

BENEFITS

- Compact design for high torque density and maximum power
- Low warehousing cost, thanks to the distinctive universal mounting
- Safe operation in potentially explosive atmospheres
- Overall dimension in line with market standards
- Easy-Clean shape

- One motor for different markets
- Simplify installation complexities and inventory management
- Uncompromised Efficiency
- Modular electric motor

- Wide range of kW from 0.55 to 30kW
- Ethernet stack to manage with 1 product code: Profinet, Ethernet IP, Sercos3, Ethercat
- Motor brake management

FEATURES

- Lifetime lubricated
- Unique oil level for all mounting position
- Stainless steel shaft and plug option
- Reinforced bearings option

- IE3 Efficiency level
- Power range up to 7,5kW
- Built in DC brake
- Thermal protection
- Anti-condensate heaters
- Second shaft extension
- Anti corrosive painting up to C5M
- Tropicalization
- Degree of prodection up to IP56

- IP65 Inverter
- Reduction of electrical wiring
- Management of acynchronous induction, synchronous reluctance and permanent magnet motors

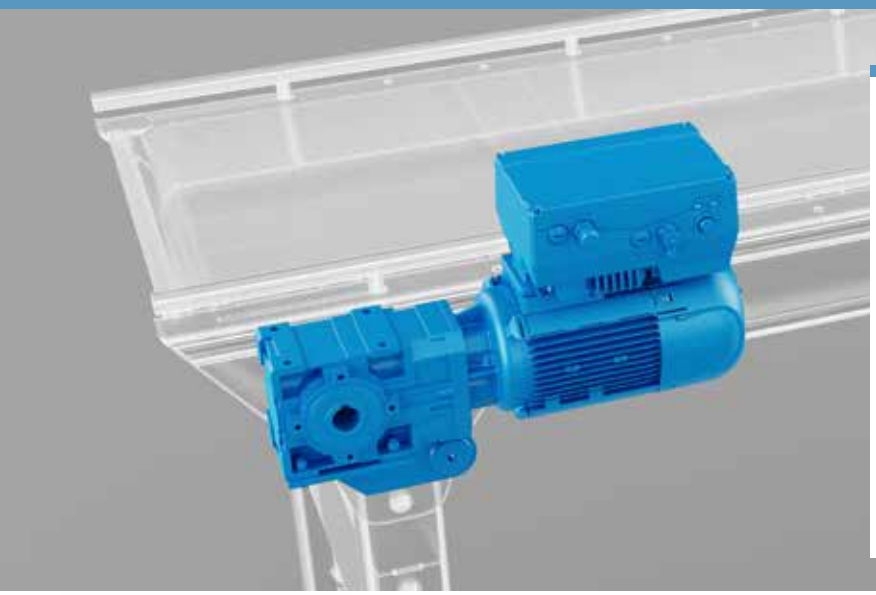

2

BELT CONVEYORS

Our solution consists of a complete drive transmission package, from the gearbox to the decentralized inverter. In roller conveyors, our solution is based on coaxial gearbox or orthogonal gearboxes with bevel gear, always combined with our compact IE3 electric motor and the IP65 DGM-MPM inverter.
In applications where high efficiency is required, we can offer our synchronous reluctance motor with IE4 efficiency.

A Series
Helical Bevel Gearbox

BSR Series
Synchronous Reluctance Motors

DGM-MPM Series
Decentralized Inverter

BENEFITS

- Reduced installation space
- Wide output speed range
- High stiffness for dynamic application
- Safe operation in potentially explosive atmospheres

- No need for feedback device for positioning
- One or two sizes less compared to standard asynchronous motors
- Minimal maintenance required
- Sustainable solution
- Excellent performance and dynamics

- Wide range of kW from 0.55 to 30kW
- Ethernet stack to manage with 1 product code: Profinet, Ethernet IP, Sercos3, Ethercat
- Motor brake management

FEATURES

- Shaft mounting with hollow shaft and torque arm or shrink disk
- Reinforced bearings available as an option
- Reduced backlash as an option

- Motor efficiency class up to IE4
- Power range: up to 18,5 kW
- Wide range of options

- IP65 Inverter
- Reduction of electrical wiring
- Management of acynchronous induction, synchronous reluctance and permanent magnet motors

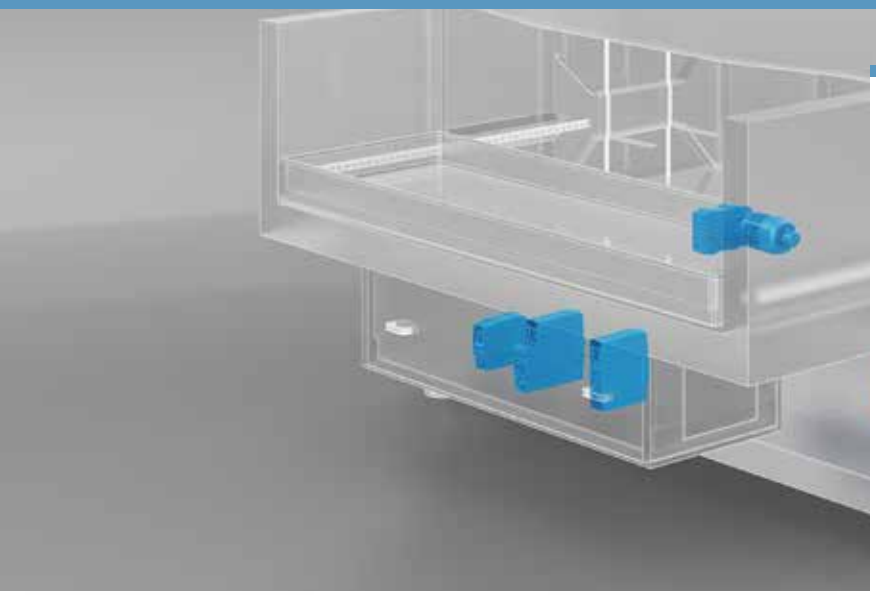

3

COMPACT AUTOMATIC WAREHOUSE

We supply our customers with complete solutions that guarantee the highest possible precision, efficiency and energy optimization for automatic storage applications. From the inverter to the drives, Bonfiglioli is a one-stop company that understands and able to face today's market challenges.

F Series

Shaft Mounted Gearbox

EVOX BXN Series

Asynchronous Induction Phase Motor

AxiaVert Series

High Performance Cabinet Inverter

BENEFITS

- High efficiency
- Reliability and robustness
- Compactness
- Low maintenance

- One motor for different markets
- Simplify installation complexities and inventory management
- Uncompromised Efficiency
- Modular electric motor

- Modular system
- Wide power range
- Versatile Communication
- High mounting flexibility

FEATURES

- Power range: up to 55 kW
- Shaft mounted solution with different output configurations
- Housing integrated torque arm design and anti-vibration kits
- Wide range of ratios
- Space-saving compact motor design
- Availability of different grade of protection
- Compact or IEC/NEMA flanged motor adaptors

- IE3 Efficiency level
- Power range up to 7,5kW
- Built in DC brake
- Thermal protection
- Anti-condensate heaters
- Second shaft extension
- Anti corrosive painting up to C5M
- Tropicalization
- Degree of prodection up to IP56

- Selectable Functional safety features (up to SIL 3 / PL e / CAT. 4)
- Wide range of Encoder supports for various systems
- Customizable logic functions with internal optional PLC (IEC61131)
- Integrated PID control system
- Various Control modes incl. Position, Speed or Torque Control & CiA402-compatible Motion Control
- Easy wiring with detachable signal and power terminals (up to 15 kW)

4

FORKLIFTS

Bonfiglioli supplies high-efficiency, low-noise planetary axles and drives with integrated high performance electric motors and low maintenance braking systems for Class 1 material handling vehicles. Typical applications include 3- and 4-wheel counterbalance lift trucks and ground support equipment. Bonfiglioli electric powertrains are fully tested in the factory and guarantee low energy consumption. This, in turn, means longer battery operating times, extended servicing intervals and lower costs of ownership.

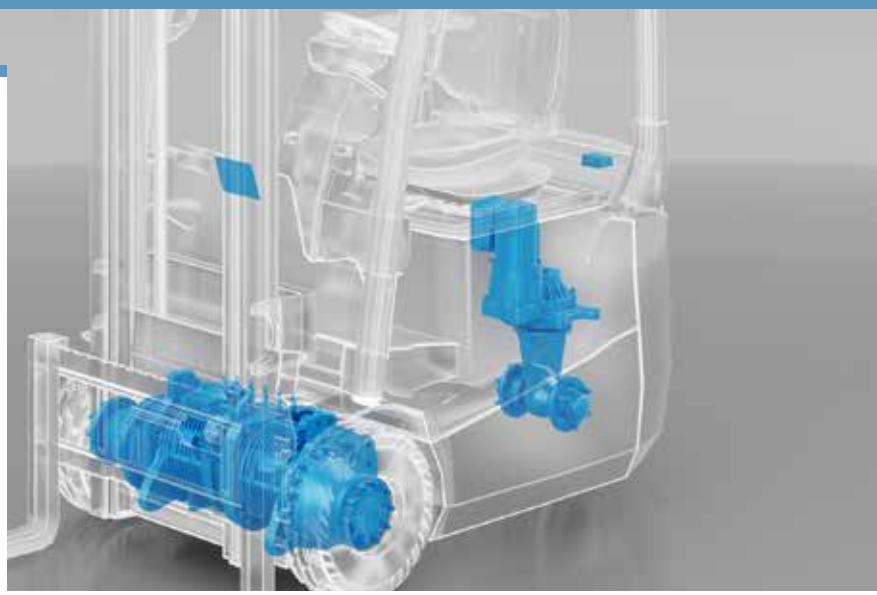

600F Series
Traction Systems

BENEFITS

- Maximum efficiency
- Minimum noise
- Complete solution
- Fully tested

FEATURES

- Dual stage gearbox
- Optimized gear design
- Service brake
- Parking brake
- Integrated, customized mast support
- Integrated AC traction motor protection rating up to IP54
- Integrated, high accuracy, silicon-based temperature sensor
- Integrated, high resolution hall effect speed sensor

TECHNICAL DATA

	Axle torque (Nm)
601 F	3,000
602 F	5,500
603 F	7,000
605 F	18,000
610 F	50,000

	Lift capacity (kg)
601 F	2,000
602 F	3,500
603 F	5,000
605 F	9,000
610 F	16,000

600W0C Series
Idle Steering System

- 360° steering
- Complete solution
- Fully tested

- Hydraulic steering
- Electric steering for 601W0
- Optimized steering angle design

	Lift capacity (kg)
601 W0C	2,000
602 W0C	3,000
603 W0C	3,500

DISPLAY
Customized solution

- High integration level
- High-end & high-speed design
- All black IPS display
- Polyphonic grade alarms
- Double high-speed (and full management) of can interface
- IP65 grade protection
- Capacitive touch button
- Light sensor for backlight

DC/DC CONVERTER
Customized solution

- Extended input voltage
- Back and forward topology
- Multiple output power version with the same enclosure
- Isolated and not isolated topology
- Thermal protection
- Output protection
- Balancing power between 2 DC/DC
- LIN interface
- Input enable
- Up to 60°C ambient temperature
- IP65 grade protection

5

WAREHOUSING TRUCKS

Bonfiglioli EL powertrains are a perfect match for the most demanding warehousing applications (Class 2 and Class 3). Warehousing trucks require high maneuverability in tight spaces, provided by drives like those in the EL series, with the smallest operating radius in vertical arrangements.

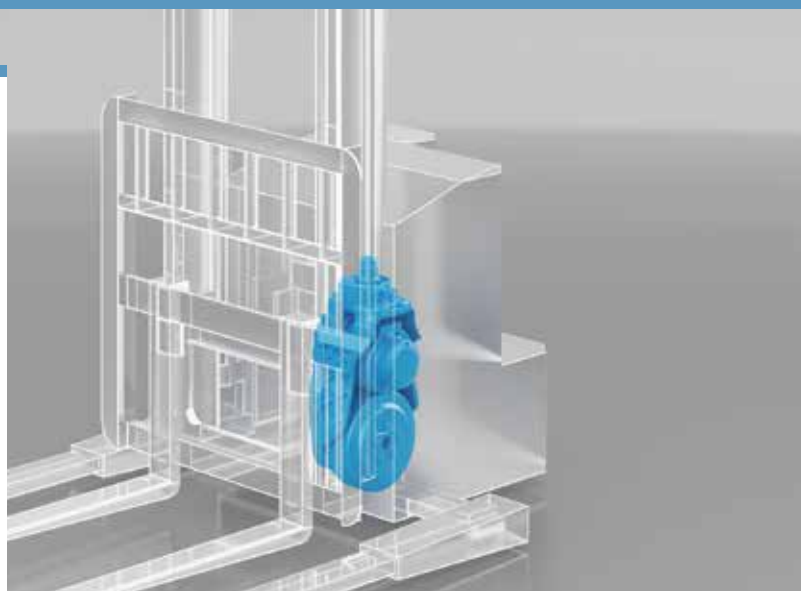

EL Series

Steerable Drives

BENEFITS

- Maximum efficiency
- Minimum noise
- Complete solution
- Fully tested

FEATURES

- Two-stage helical & bevel gearboxes
- Manual steering and power steering versions
- Optimized gear design for efficiency and noise
- Integrated low-voltage electric motor
- Integrated parking brake
- Complete system with tires

TECHNICAL DATA

	Torque (Nm)	Max wheel load (kg)
EL100	450	1,200
EL09	500	1,200
EL96	500	1,500
EL10	900	1,500
EL300	1,100	2,200
EL92	1,500	3,000
EL93	1,500	3,000
EL94	1,500	3,000
EL14	1,900	3,400
EL16	2,500	4,000

6

AUTOMATIC GUIDED VEHICLES

Automatic Guided Vehicles (AGVs) and Autonomous Mobile Robots (AMRs) are a range of driverless transportation robots that can autonomously transport materials through designated pickup and delivery routes within a facility. AGVs and AMRs are easy to integrate into existing processes, simplifying intralogistic flows and increasing automation levels. Due to this, a wide range of sectors is adopting these solutions.

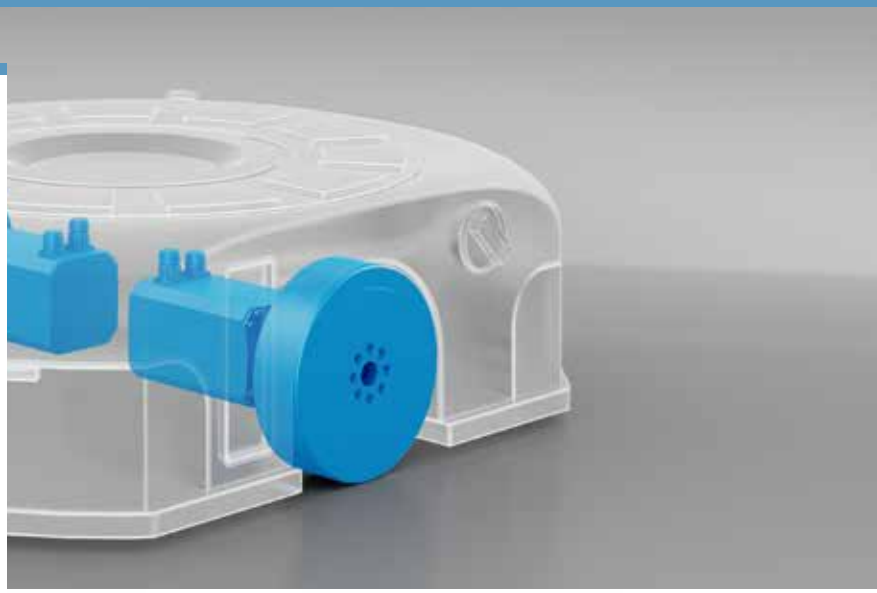

BlueRoll Basic

TQW: the new Wheel-Mounted Gearbox Series

BlueRoll Advanced

Powerful and Compact Servo Gearmotors

BlueRoll Compact

Extra Compact Servo Gearmotors

BENEFITS

- Easy installation
- Heavy load capability
- Great reliability
- Minimized installation space

- High energy efficiency
- Stiff and precise
- High torque capability
- High flexibility

- Simplified AGV design
- Suitable for long operation
- Top level configuration

FEATURES

- Three gearmotor sizes, rated for loads up to: 360kg, 720kg and 1020kg
- Speed up to 2 m/s
- New wheel-mounted precision planetary gearbox: TQW
- Permanent Magnet Synchronous Motors with premium efficiency
- Wide range of feedback systems, including safety encoders
- Compact design, extensively customizable

TECHNICAL DATA

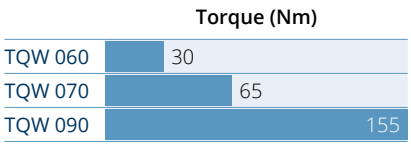

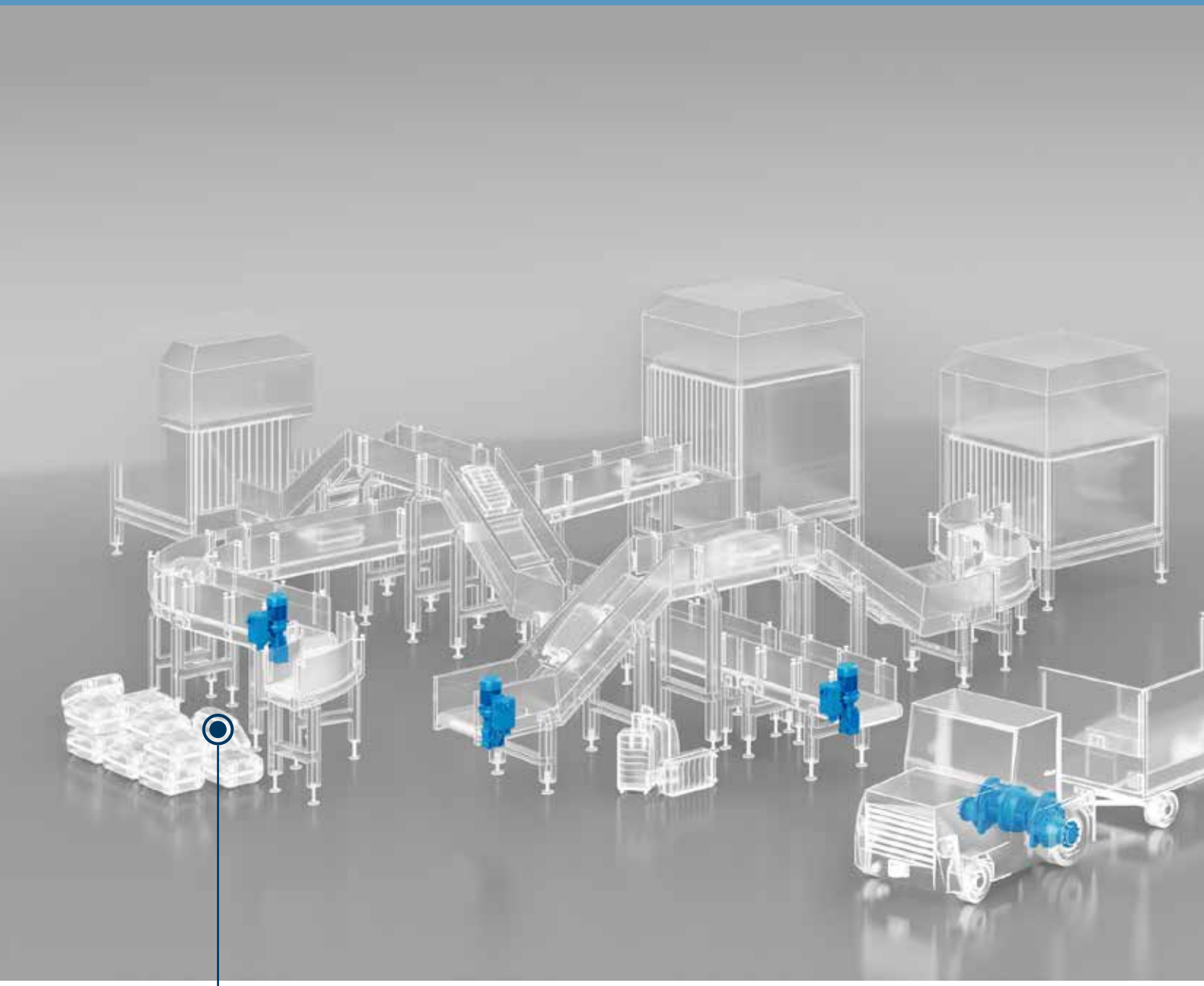

2 BAGGAGE CLAIM CONVEYORS

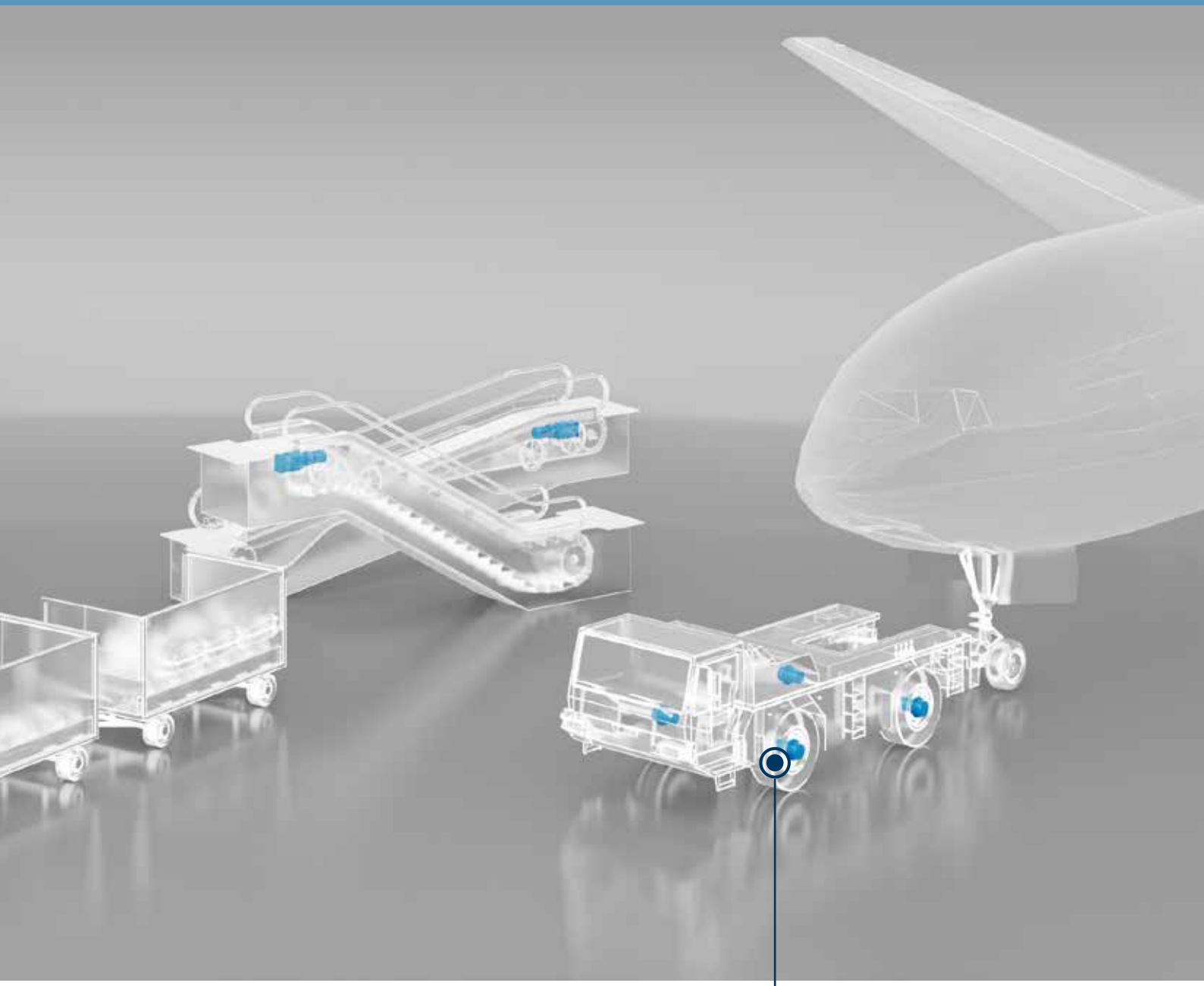

1 TOW TRACTORS

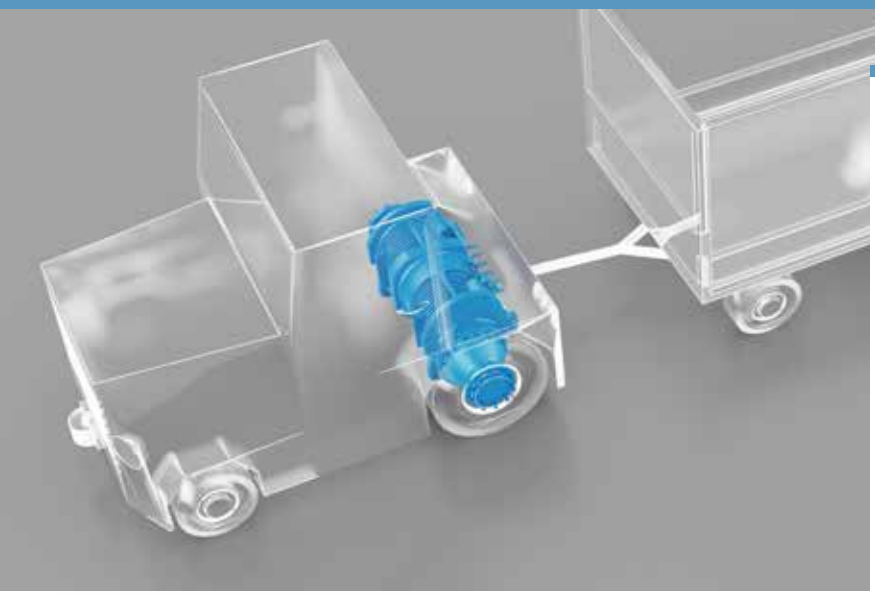

1 TOW TRACTORS

Bonfiglioli supplies high efficiency, low noise axles with integrated, high performance electric motors and low maintenance braking systems for ground support equipment (Industrial Trucks Class VI, electric type) and other electric material handling machinery used at airports. Bonfiglioli electric axles are fully tested in the factory. All drives guarantee reduced energy consumption, this means longer battery operating times, extended service intervals and a lower total cost of ownership.

600F Series
TractionSystems

BENEFITS

- Maximum efficiency
- Minimum noise
- Complete solution
- Fully tested

FEATURES

- Dual stage gearbox
- Optimized gear design
- Service brake
- Parking brake
- Integrated, customized mast support
- Integrated AC traction motor protection rating up to IP54
- Integrated, high accuracy, silicon-based KTY temperature sensor
- Integrated, high resolution hall effect speed sensor

TECHNICAL DATA

	Torque (Nm)	Max draw bar pull force (kN)
600 D	1,000	5 ... 8
601 F	3,000	9 ... 14
602 F	5,500	15 ... 18
603 F	7,000	20 ... 30

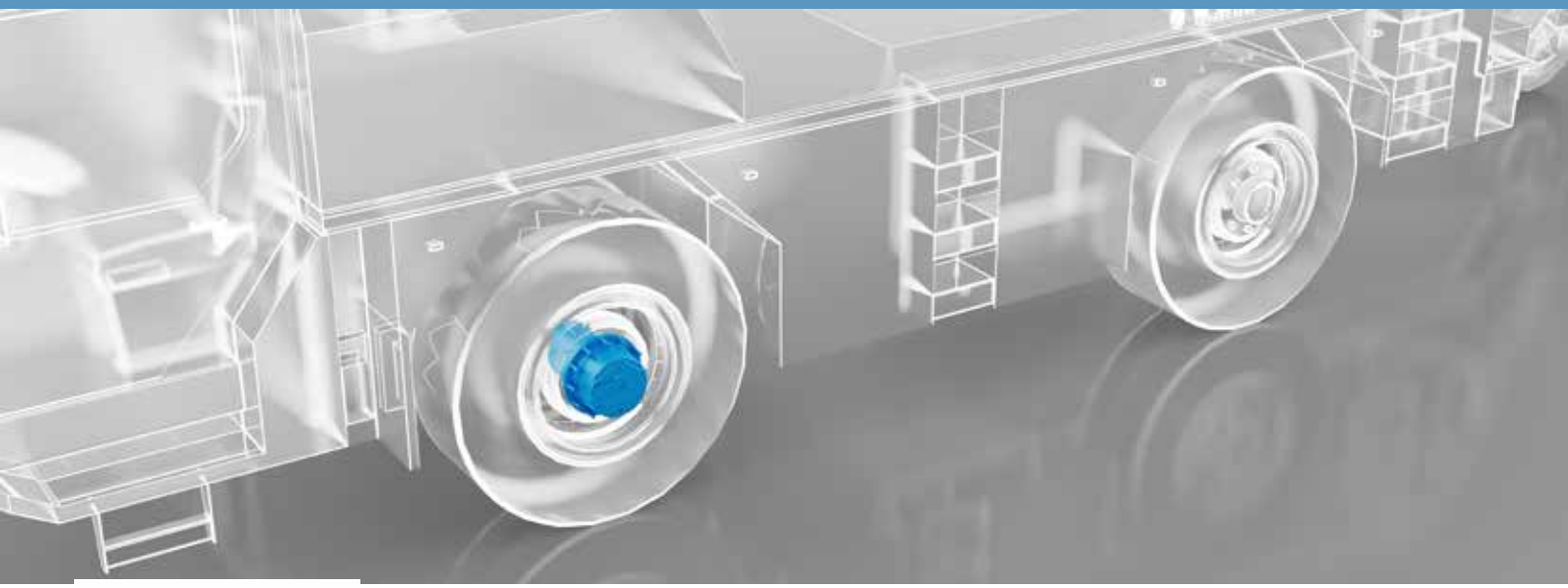

600W Series

Wheel Drives

BENEFITS

Benefits for OEMs

- Ability to downsize and downspeed combustion engines
- Easy installation: electric solution dimensions comparable to standard hydrostatics
- Higher system reliability: fewer mechanical parts
- Virtually maintenance-free electric motors
- From wheel bolt to electric wire with only one supplier

Benefits for end users

- Reduced fuel consumption
- Increased productivity
- Better machine manoeuvrability
- The electric solution is cleaner: lower risk of oil spills

FEATURES

- Multi-stage planetary gearbox
- Rotating housing output
- Validated in the field
- Permanent magnet motors
- Suitable for batteries 400 - 700Vdc
- Liquid cooled
- Aluminium or cast iron housing
- Protection rating >IP54

TECHNICAL DATA

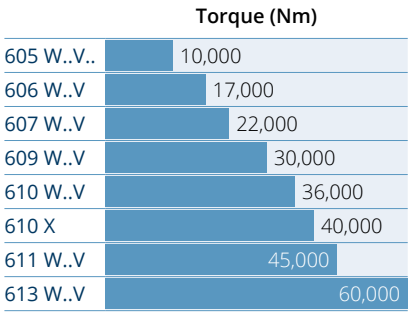

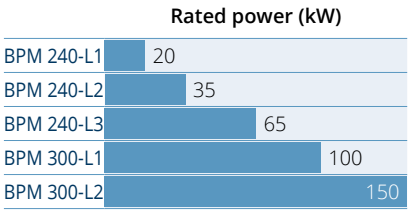

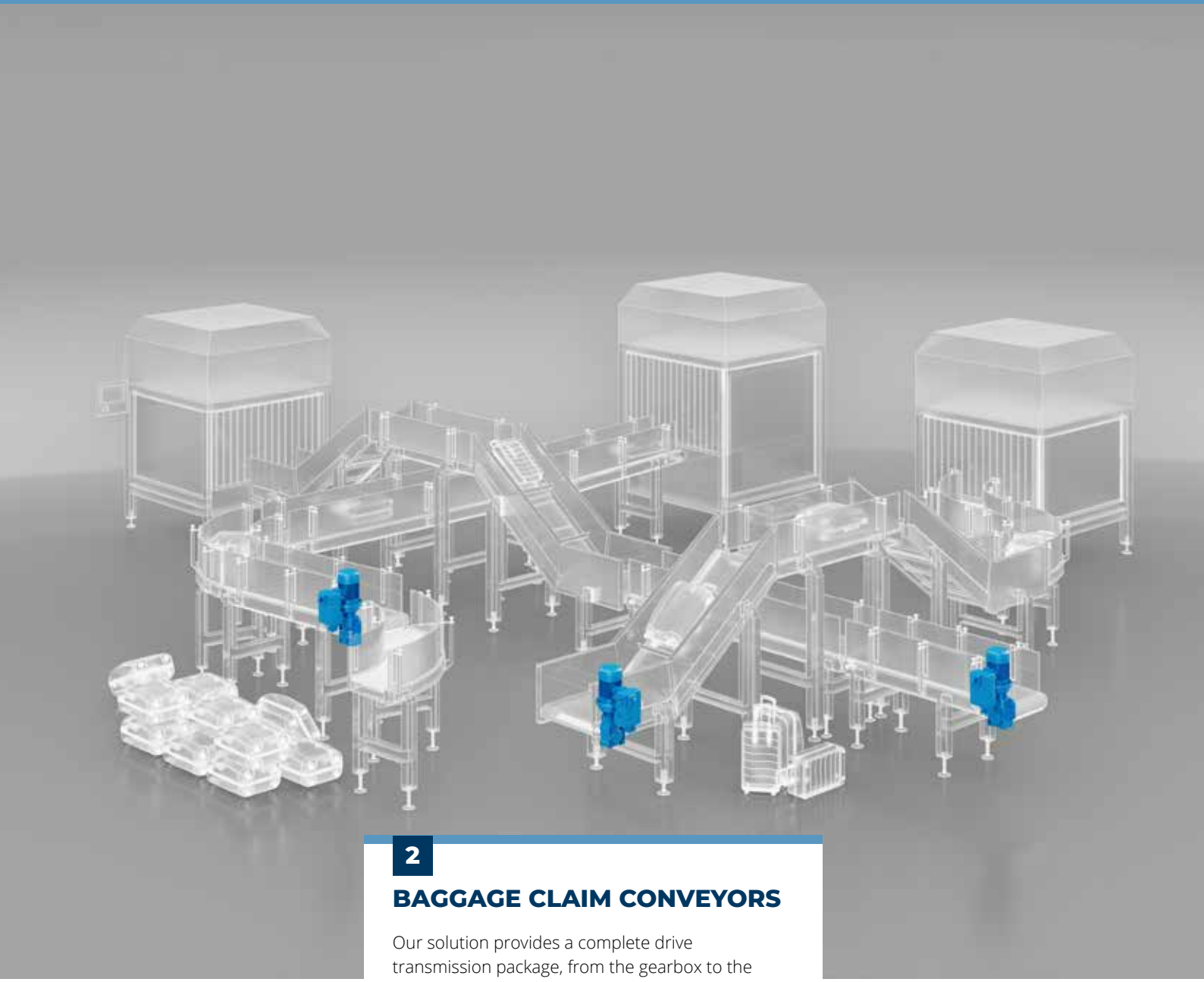

2

BAGGAGE CLAIM CONVEYORS

Our solution provides a complete drive transmission package, from the gearbox to the inverter.
For baggage claim conveyors, our range is based on bevel gearboxes, always in combination with our IE3 electric motor and decentralized inverters.
In this kind of applications where high efficiency is required, we can offer our synchronous reluctance motor with IE4 efficiency.

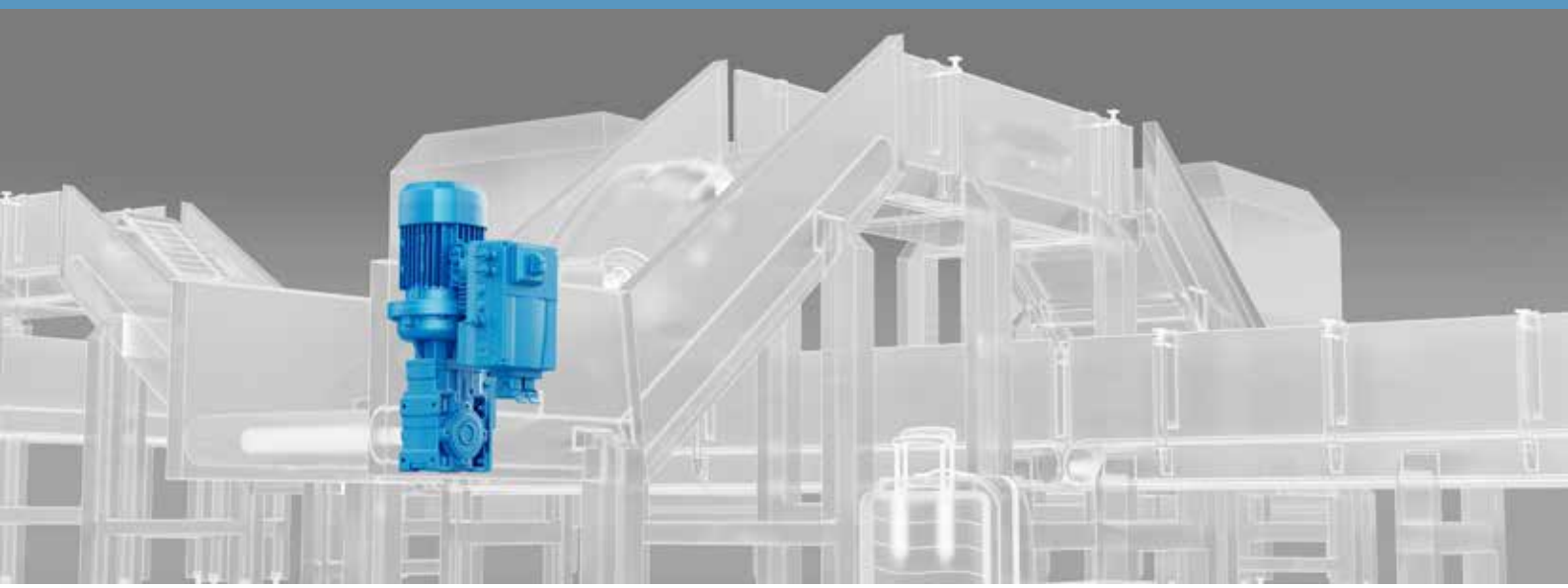

A Series

Helical Bevel Gearbox

BENEFITS

- Reduced installation space
- Wide output speed range
- High stiffness for dynamic application
- Safe operation in potentially explosive atmospheres

FEATURES

- Shaft mounting with hollow shaft and torque arm or shrink disk
- Reinforced bearings available as an option
- Reduced backlash as an option

BSR Series

Synchronous Reluctance Motors

- No need for feedback device for positioning
- One or two sizes less compared to standard asynchronous motors
- Minimal maintenance required
- Sustainable solution
- Excellent performance and dynamics

- Motor efficiency class up to IE4
- Power range: up to 18,5 kW
- Wide range of options

DGM-MPM Series

Decentralized Inverter

- Wide range of kW from 0.55 to 30kW
- Ethernet stack to manage with 1 product code: Profinet, Ethernet IP, Sercos3, Ethercat
- Motor brake management

- IP65 Inverter
- Reduction of electrical wiring
- Management of acynchronous induction, synchronous reluctance and permanent magnet motors

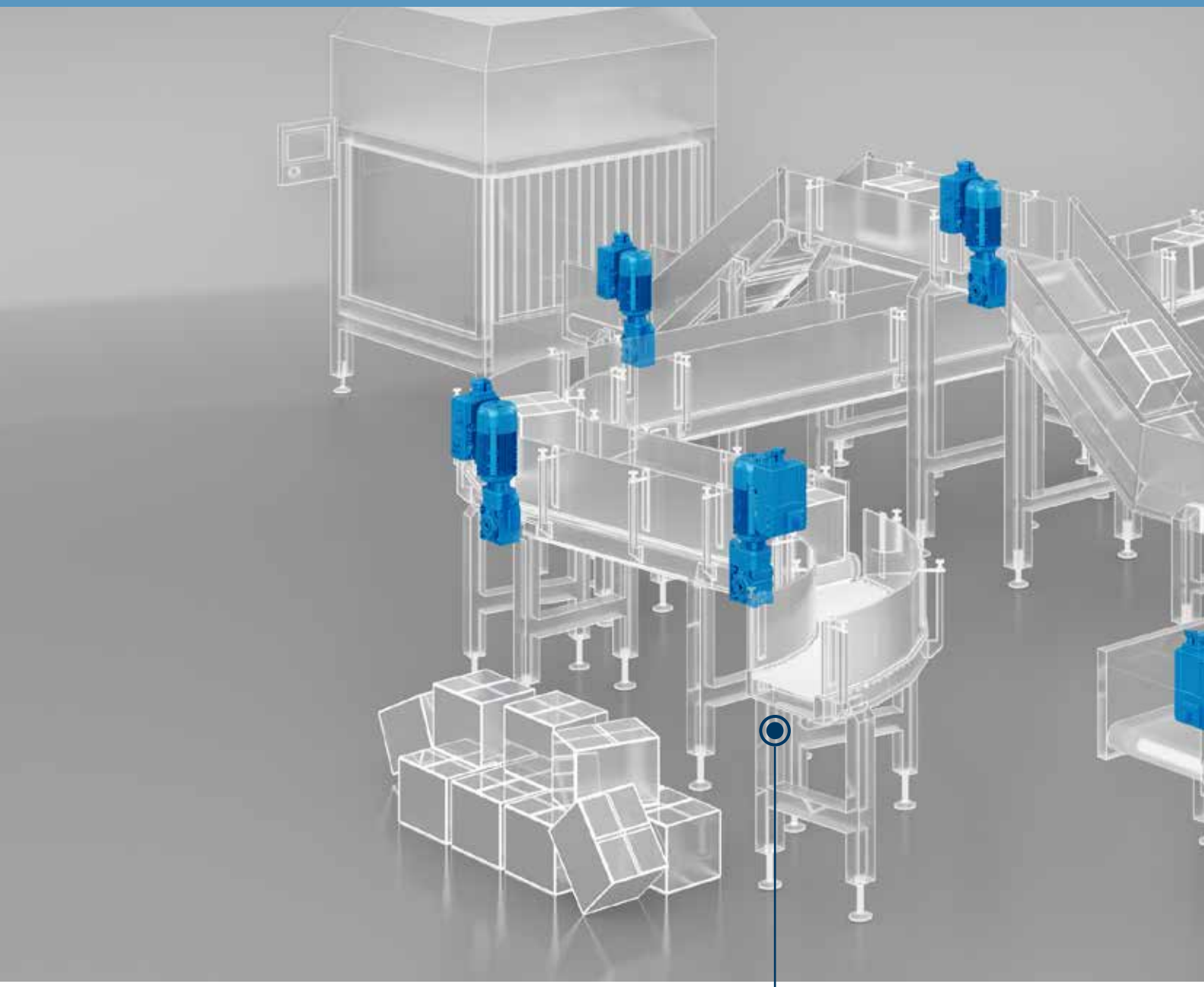

1 **POSTAL HANDLING SOLUTIONS**

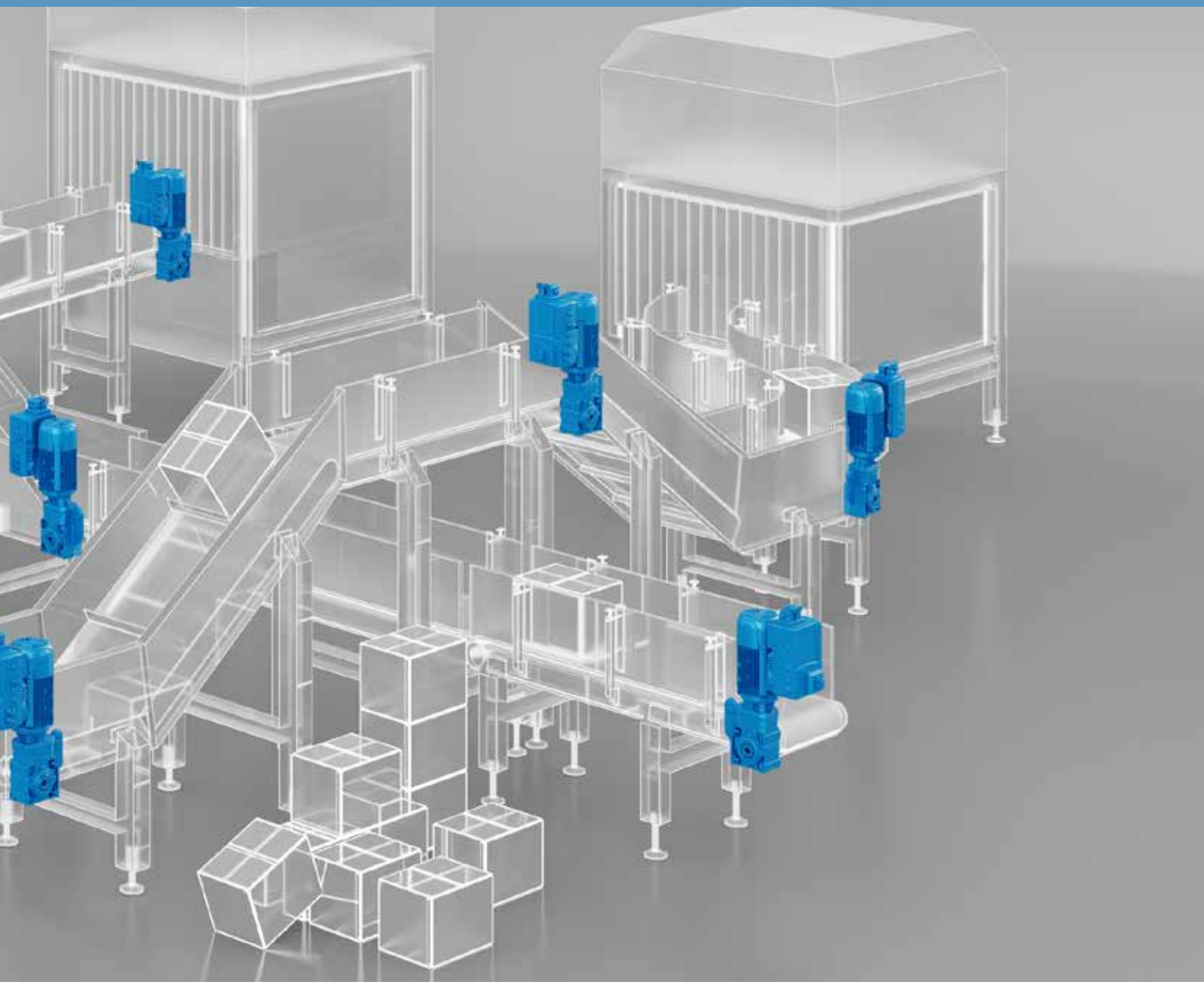

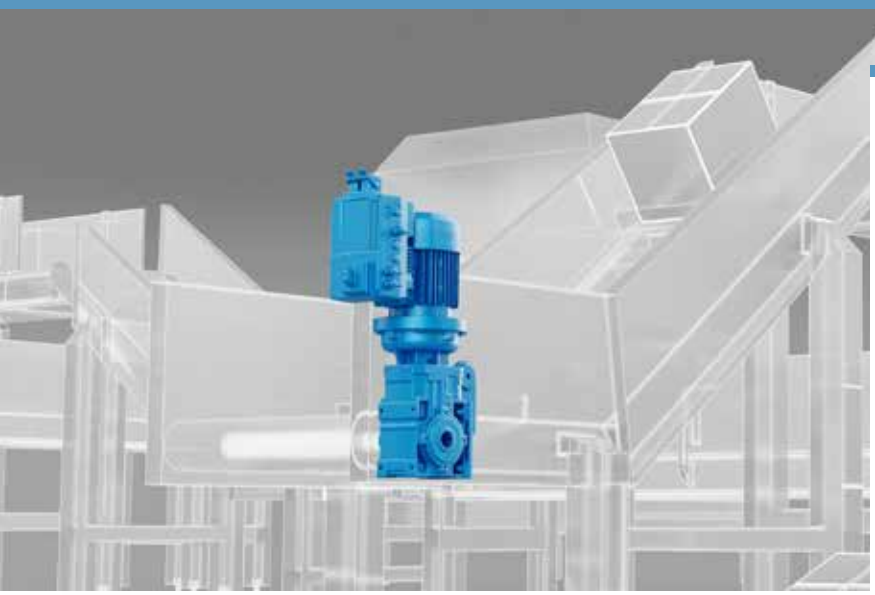

1

POSTAL HANDLING SOLUTIONS

Our solution provides a complete drive transmission package, from the gearbox to the inverter. For baggage claim conveyors, our range is based on bevel gearboxes, always in combination with our IE3 electric motor and decentralized inverters. In this kind of applications where high efficiency is required, we can offer our synchronous reluctance motor with IE4 efficiency.

A Series
Helical Bevel Gearbox

BSR Series
Synchronous Reluctance Motors

DGM-MPM Series
Decentralized Inverter

BENEFITS

- Reduced installation space
- Wide output speed range
- High stiffness for dynamic application
- Safe operation in potentially explosive atmospheres

- No need for feedback device for positioning
- One or two sizes less compared to standard asynchronous motors
- Minimal maintenance required
- Sustainable solution
- Excellent performance and dynamics

- Wide range of kW from 0.55 to 30kW
- Ethernet stack to manage with 1 product code: Profinet, Ethernet IP, Sercos3, Ethercat
- Motor brake management

FEATURES

- Shaft mounting with hollow shaft and torque arm or shrink disk
- Reinforced bearings available as an option
- Reduced backlash as an option

- Motor efficiency class up to IE4
- Power range: up to 18,5 kW
- Wide range of options

- IP65 Inverter
- Reduction of electrical wiring
- Management of acynchronous induction, synchronous reluctance and permanent magnet motors

A Series

Helical Bevel Gearbox

EVOX BXN Series

Asynchronous Induction Phase Motor

DGM-MPM Series

Decentralized Inverter

BENEFITS

- Reduced installation space
- Wide output speed range
- High stiffness for dynamic application
- Safe operation in potentially explosive atmospheres

- One motor for different markets
- Simplify installation complexities and inventory management
- Uncompromised Efficiency
- Modular electric motor

- Wide range of kW from 0.55 to 30kW
- Ethernet stack to manage with 1 product code: Profinet, Ethernet IP, Sercos3, Ethercat
- Motor brake management

FEATURES

- Shaft mounting with hollow shaft and torque arm or shrink disk
- Reinforced bearings available as an option
- Reduced backlash as an option

- IE3 Efficiency level
- Power range up to 7,5kW
- Built in DC brake
- Thermal protection
- Anti-condensate heaters
- Second shaft extension
- Anti corrosive painting up to C5M
- Tropicalization
- Degree of prodection up to IP56

- IP65 Inverter
- Reduction of electrical wiring
- Management of acynchronous induction, synchronous reluctance and permanent magnet motors

ACCESS PLATFORMS

Wheel drives
With a reliable series of products made for access platforms, Bonfiglioli gives machine builders the best possible choice of drive systems. The compact, silent, highly efficient and maintenance-free integrated drive motors are excellent with access platforms for indoor and outdoor use.

Slew drives
Bonfiglioli slew drives are the most effective solution for both hydraulic and electric access platforms.

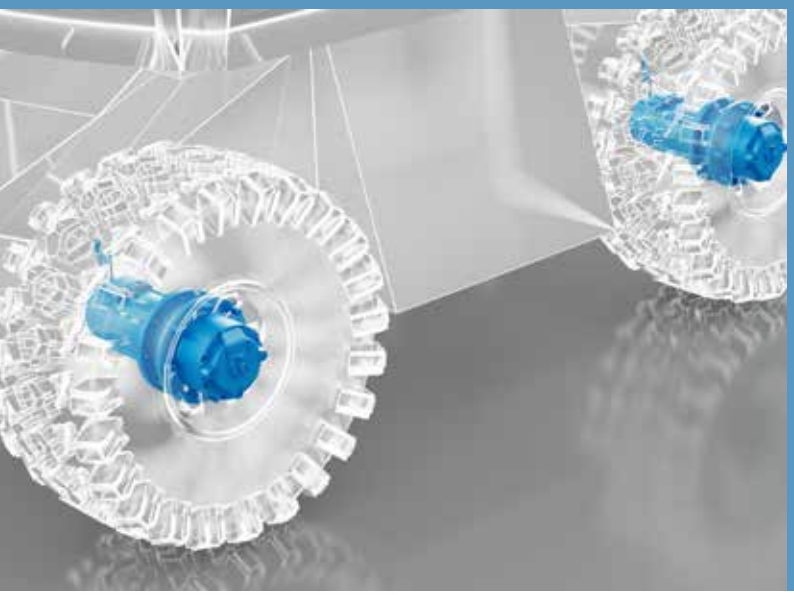

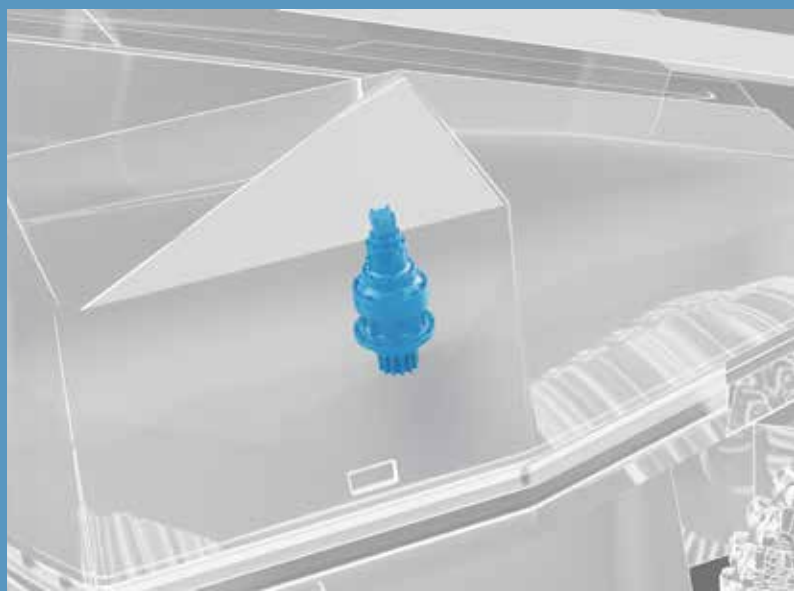

600WE Series

Wheel Drives

700T Series

Slew Drives

BENEFITS

- Compact dimensions
- Low noise
- High efficiency
- Maintenance-free motors

- Rugged construction
- Flange mounted
- High torque capacity

FEATURES

- Two- or three-stage planetary drive with reduction ratios of up to 1:145
- Optimized gear design for maximum efficiency and minimum noise
- Integrated, low voltage, 3-phase induction motor
- Integrated, high accuracy, temperature sensor
- High resolution, hall-effect speed sensor
- Motor protection rating up to IP67

- Driven by hydraulic or electric motor
- Output shaft with pinion
- Compact design
- Wide range of pinions
- Including brake, wet disc or electromagnetic

TECHNICAL DATA

	Torque (Nm)
600 WL	500
600 WE	900
601 RE	3,000
602 RE	3,500
602 WE	4,500
604 WE	7,000
605 WE	10,000

	Torque (Nm)
700 T F	1,200
701 T F	2,400
703 T F	3,500
705 T F	6,500

Solutions for

LOGISTICS & INTRALOGISTICS

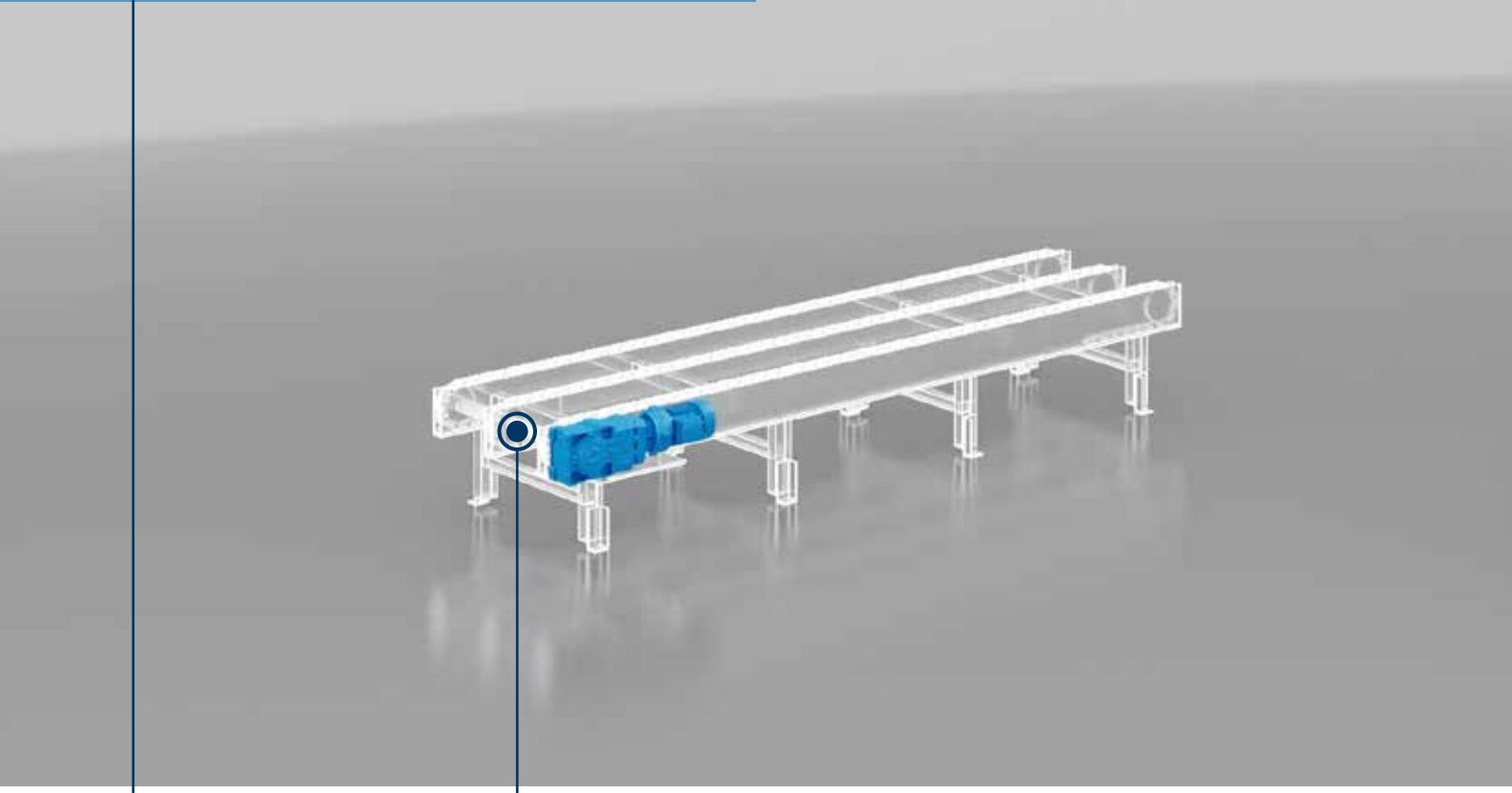

3 CHAIN CONVEYORS

1 ROLLER CONVEYORS

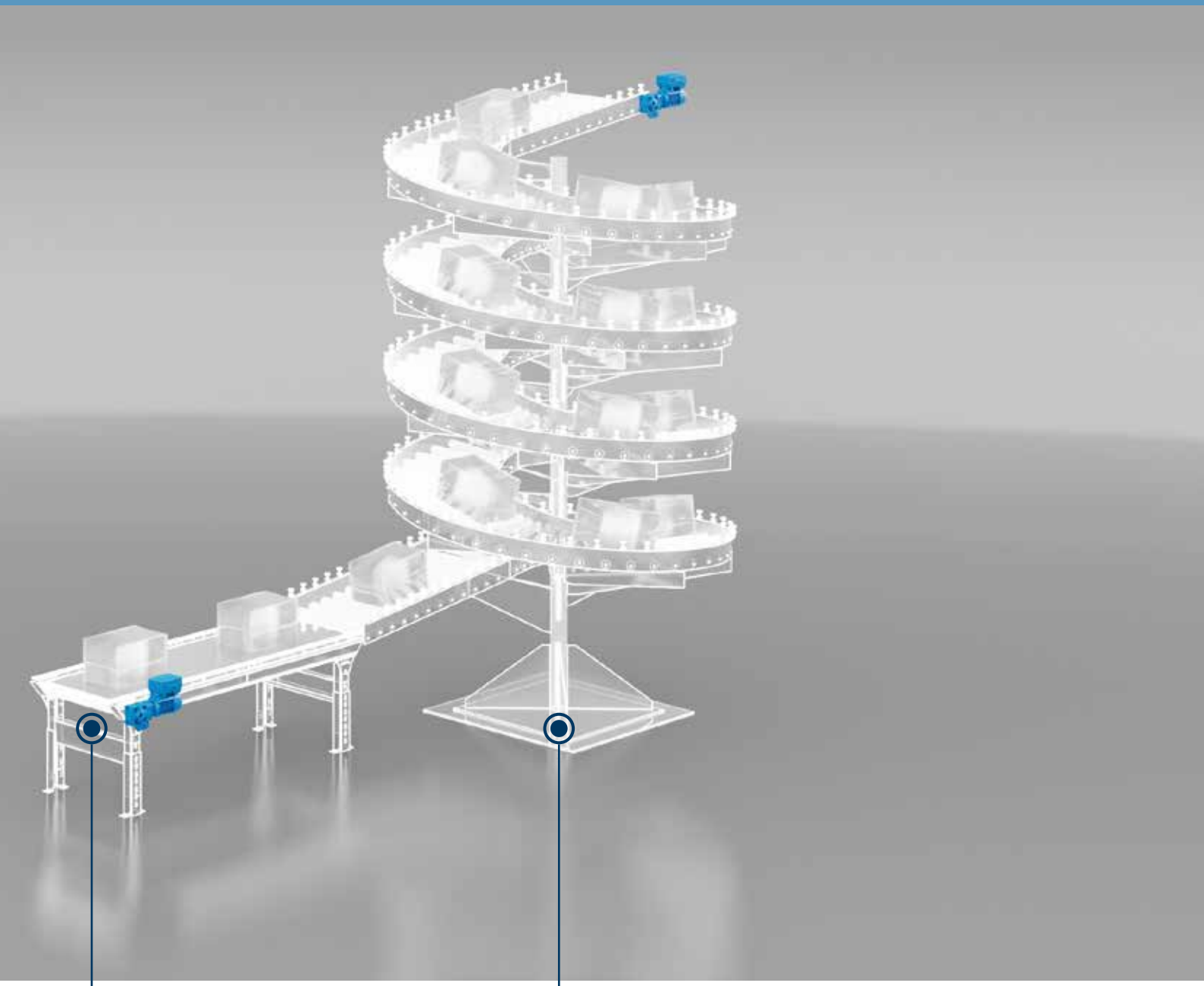

2 BELT CONVEYORS

4 SPIRAL CONVEYORS

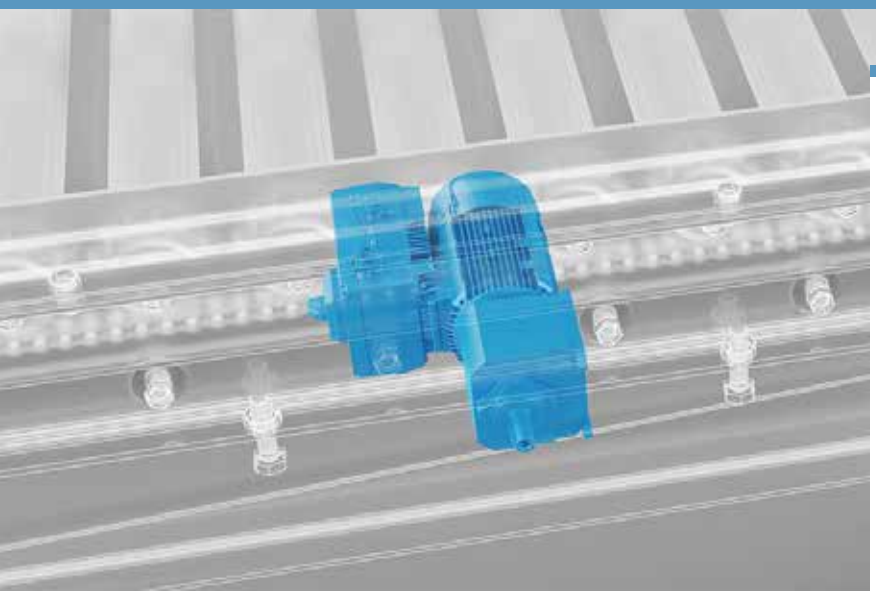

1 ROLLER CONVEYORS

Bonfiglioli provides a complete drive transmission package, from the gearbox to the decentralized inverter. In roller conveyors, our solution is based on coaxial gearbox or orthogonal gearboxes with bevel gear, always combined with our compact IE3 electric motor and the IP65 DGM-MPM inverter.

EVOX CP Series
Helical In-Line Gearbox

EVOX MXN Series
Asynchronous Motors

DGM-MPM Series
Decentralized Inverter

BENEFITS

- Compact design for high torque density and maximum power
- Low warehousing cost, thanks to the distinctive universal mounting
- Safe operation in potentially explosive atmospheres
- Overall dimension in line with market standards
- Easy-Clean shape

- One motor for different markets
- Simplify installation complexities and inventory management
- Uncompromised Efficiency
- Modular electric motor

- Wide range of kW from 0.55 to 30kW
- Ethernet stack to manage with 1 product code: Profinet, Ethernet IP, Sercos3, Ethercat
- Motor brake management

FEATURES

- Lifetime lubricated
- Unique oil level for all mounting position
- Stainless steel shaft and plug option
- Reinforced bearings option

- IE3 Efficiency level
- Power range up to 7,5kW
- Built in DC brake
- Thermal protection
- Anti-condensate heaters
- Second shaft extension
- Anti corrosive painting up to C5M
- Tropicalization
- Degree of prodection up to IP56

- IP65 Inverter
- Reduction of electrical wiring
- Management of acynchronous induction, synchronous reluctance and permanent magnet motors

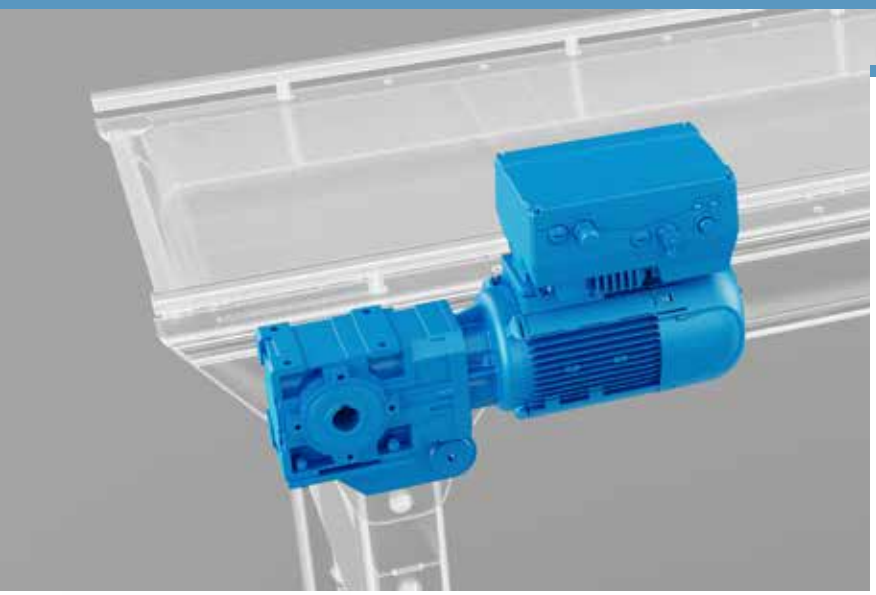

2

BELT CONVEYORS

Bonfiglioli provides a complete drive transmission package, from the gearbox to the decentralized inverter. In roller conveyors, our solutionw is based on coaxial gearbox or orthogonal gearboxes with bevel gear, always combined with our compact IE3 electric motor and the IP65 DGM-MPM inverter.
In applications where high efficiency is required, we can offer our synchronous reluctance motor with IE4 efficiency.

A Series

Helical Bevel Gearbox

BSR Series

Synchronous Reluctance Motors

DGM-MPM Series

Decentralized Inverter

BENEFITS

- Reduced installation space
- Wide output speed range
- High stiffness for dynamic application
- Safe operation in potentially explosive atmospheres

- No need for feedback device for positioning
- One or two sizes less compared to standard asynchronous motors
- Minimal maintenance required
- Sustainable solution
- Excellent performance and dynamics

- Wide range of kW from 0.55 to 30kW
- Ethernet stack to manage with 1 product code: Profinet, Ethernet IP, Sercos3, Ethercat
- Motor brake management

FEATURES

- Shaft mounting with hollow shaft and torque arm or shrink disk
- Reinforced bearings available as an option
- Reduced backlash as an option

- Motor efficiency class up to IE4
- Power range: up to 18,5 kW
- Wide range of options

- IP65 Inverter
- Reduction of electrical wiring
- Management of acynchronous induction, synchronous reluctance and permanent magnet motors

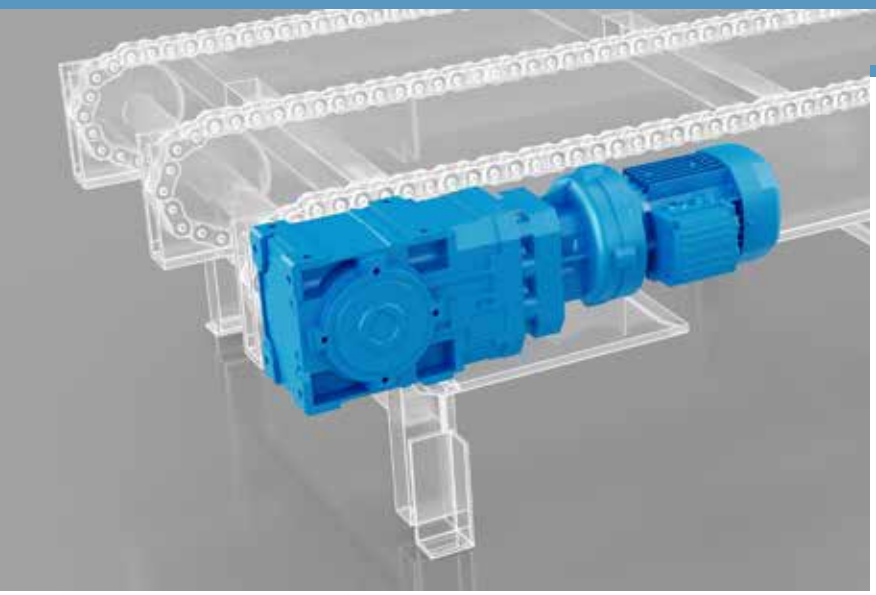

3
CHAIN CONVEYORS

Chain conveyors are used in many industries to transport all kinds of material: metal, mining, coal, chemical, food, ports and others.
Bonfiglioli knows how to size the correct solution, taking loads and all other specific needs into account.
Our range runs from harsh and explosive atmospheres to food contact environments, offering a wide range of gearmotors and inverters.

A Series
Helical Bevel Gearbox

BENEFITS

- Reduced installation space
- Wide output speed range
- High stiffness for dynamic application
- Safe operation in potentially explosive atmospheres

FEATURES

- Shaft mounting with hollow shaft and torque arm or shrink disk
- Reinforced bearings available as an option
- Reduced backlash as an option

MX Series
Asynchronous Motors

- Reliable, balanced and robust
- Compliant with the most of the efficiency standards

- Motor efficiency class IE3
- Power range: up to 18,5 kW
- Built in DC brakes
- Wide range of options
- Degree of protection up to IP56

Agile Series
Smart inverter

- Smooth start
- Variable "cut position" for smaller particles
- Energy saving function: current consumption redirection during start phase

- Series optionally extendable for field bus communication
- Sensorless control of synchronous and asynchronous motors
- Modbus and Systembus onboard
- DC link connection
- Integrated brake chopper
- Power failure control
- Programmable PI Controller
- Integrated VPLC
- Master/slave function with electronic gear
- Integrated safe torque off STO (SIL 2 / PL d) function
- Energy Saving function
- Intelligent current limits
- Output frequency 0...599 Hz, higher frequencies on request
- Diagnosis and setup via integrated keypad and integrated Service interface for PC connection

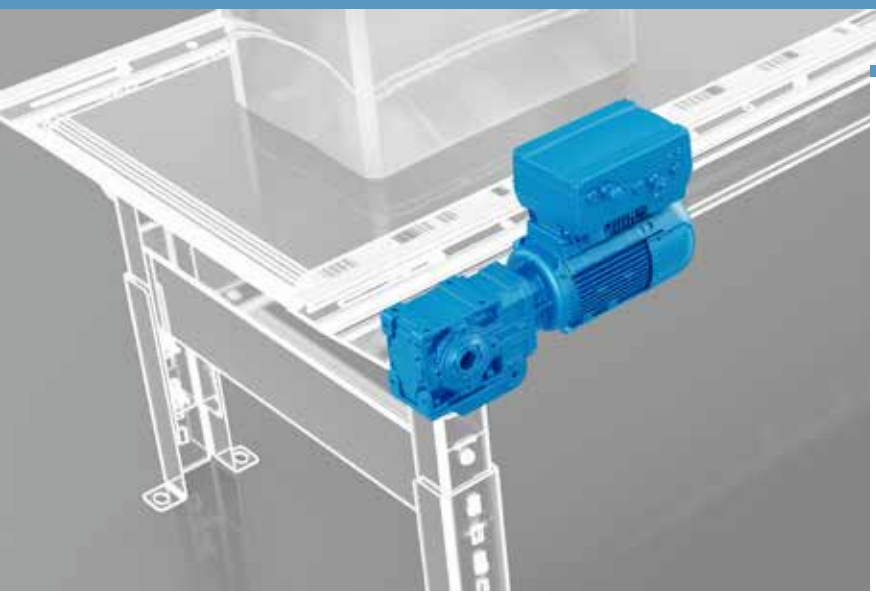

4

SPIRAL CONVEYORS

Our solution consists of a complete drive transmission package, from the gearbox to the decentralized inverter. For spiral conveyors, our range is based on bevel gearboxes, always in combination with our IE3 electric motor and our internal panel inverters.
In applications where high efficiency is required, we can offer our synchronous reluctance motor with IE4 efficiency

A Series
Helical Bevel Gearbox

EVOX BXN Series
Asynchronous Induction Phase Motor

DGM-MPM Series
Decentralized Inverter

BENEFITS

- Reduced installation space
- Wide output speed range
- High stiffness for dynamic application
- Safe operation in potentially explosive atmospheres

- One motor for different markets
- Simplify installation complexities and inventory management
- Uncompromised Efficiency
- Modular electric motor

- Wide range of kW from 0.55 to 30kW
- Ethernet stack to manage with 1 product code: Profinet, Ethernet IP, Sercos3, Ethercat
- Motor brake management

FEATURES

- Shaft mounting with hollow shaft and torque arm or shrink disk
- Reinforced bearings available as an option
- Reduced backlash as an option

- IE3 Efficiency level
- Power range up to 7,5kW
- Built in DC brake
- Thermal protection
- Anti-condensate heaters
- Second shaft extension
- Anti corrosive painting up to C5M
- Tropicalization
- Degree of prodection up to IP56

- IP65 Inverter
- Reduction of electrical wiring
- Management of acynchronous induction, synchronous reluctance and permanent magnet motors

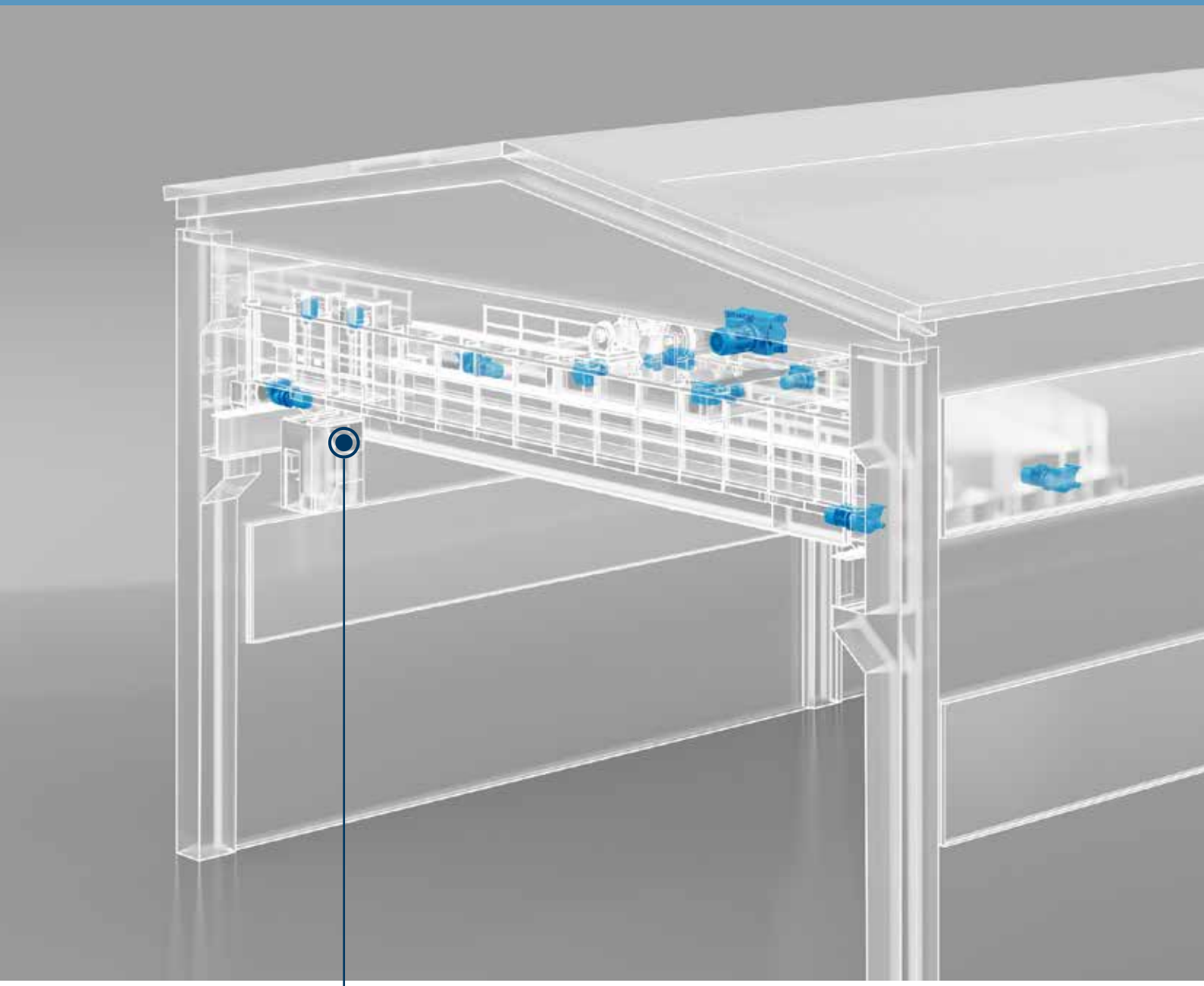

1 OVERHEAD CRANES

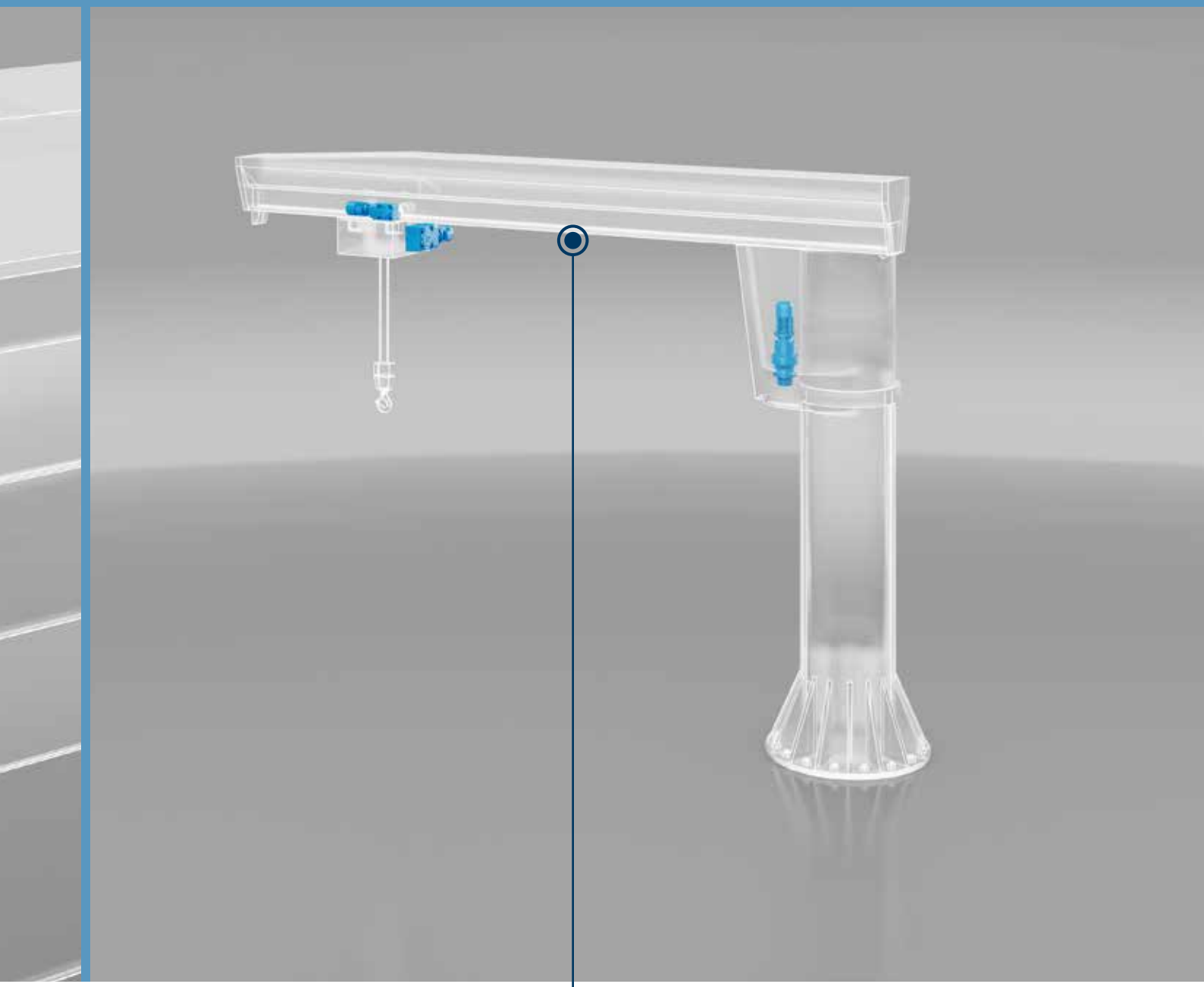

2 JIB CRANES

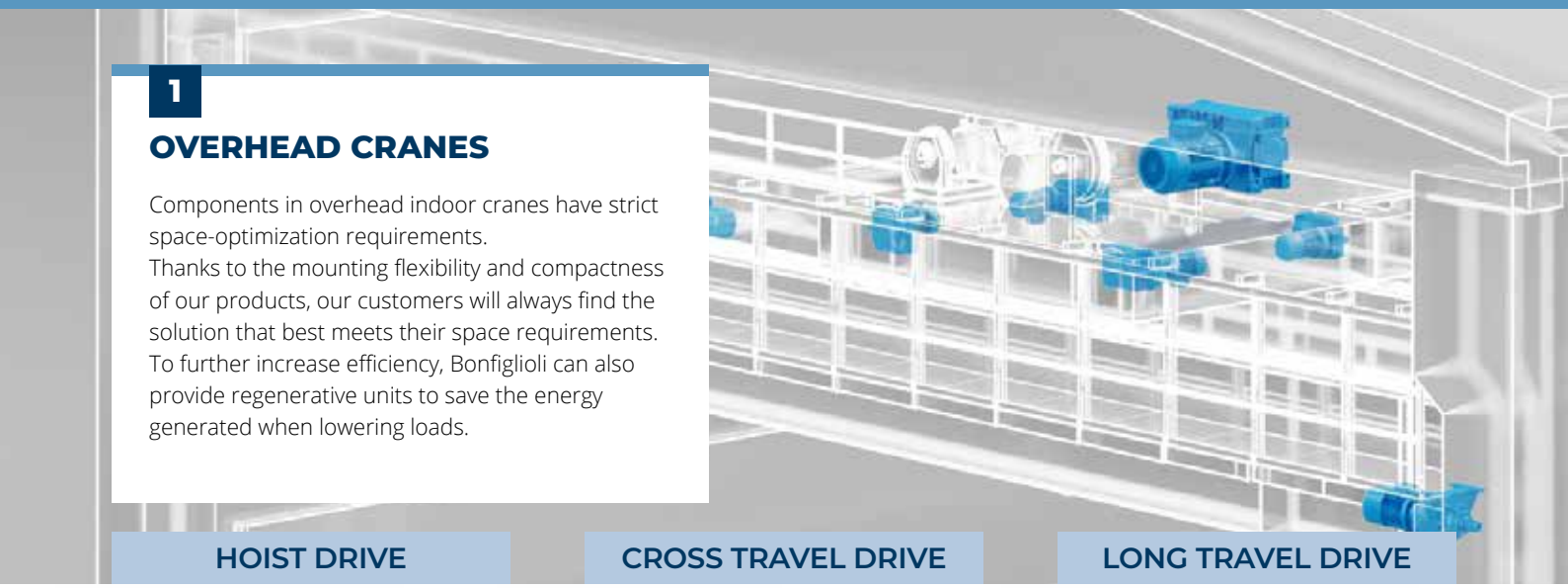

1

OVERHEAD CRANES

Components in overhead indoor cranes have strict space-optimization requirements.
Thanks to the mounting flexibility and compactness of our products, our customers will always find the solution that best meets their space requirements.
To further increase efficiency, Bonfiglioli can also provide regenerative units to save the energy generated when lowering loads.

HOIST DRIVE	CROSS TRAVEL DRIVE	LONG TRAVEL DRIVE
HDP Series Heavy Duty Geared Motor (Helical-Parallel)	**F Series** Shaft Mounted Gearbox	**300M Series** Planetary Gearbox
BENEFITS • Robustness • Reliability in harsh working conditions and wide range of temperature • Space effective U-shape arrangement • High overhung load capacity • Tailored service and warranty plans • Pre-sales and product definition support according to the material handling and lifting standards	• High efficiency • Reliability and robustness • Compactness • Low maintenance	• Robustness • Reliability in harsh working conditions & wide range of temperature • High torque density • Modularity • High overhung load capacity
FEATURES • Double input and output shaft • Wide range of ratios • Transmissible torque up to 210.000 Nm • IEC or NEMA motor flange • Safety solutions according to the customer requirements • Wide range of motion control solutions • Availability of different grade of protection	• Shaft mounted solution with different output configurations • Housing integrated torque arm design and anti-vibration kits • Wide range of ratios • Availability of different grade of protection • Compact or IEC/NEMA flanged motor adaptors	• Widest range of ratios • Easy to fit output pinion • IEC or NEMA motor flange • Wide range of motion control solutions • Availability of different grades of protection

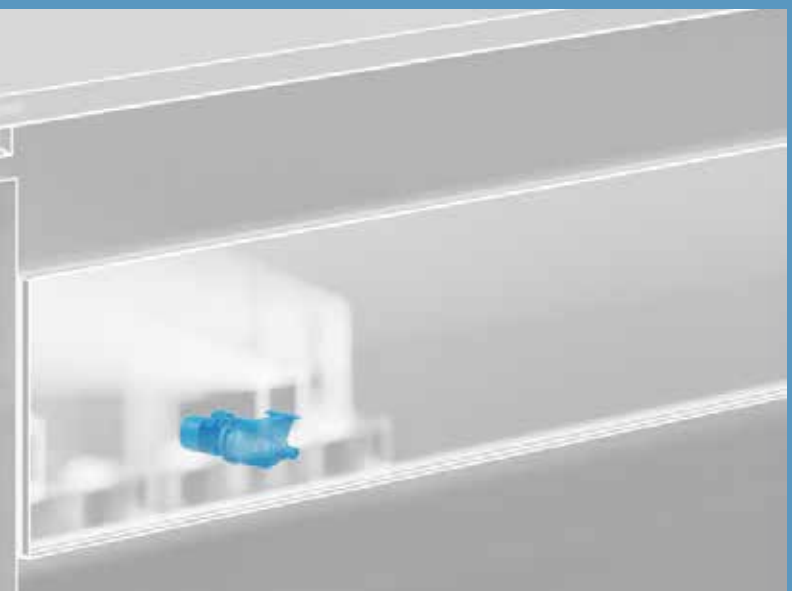

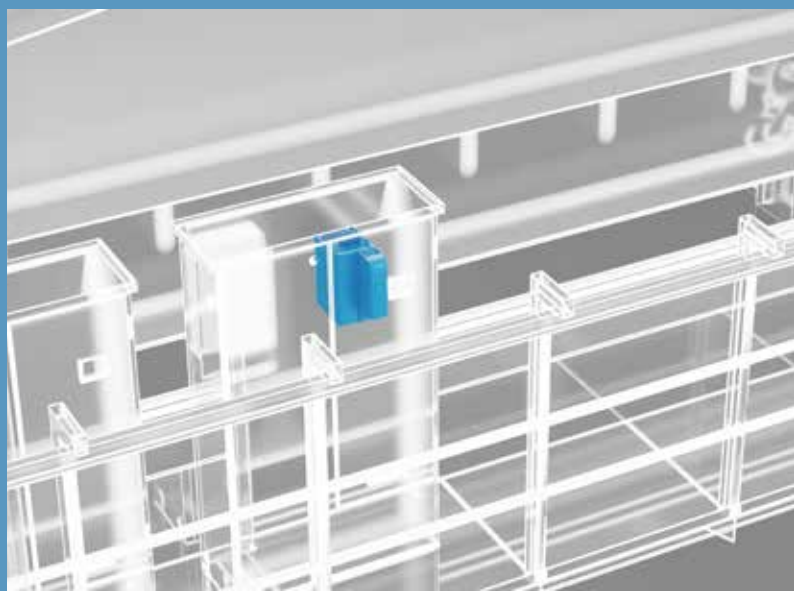

BX Series

Asynchronous Induction Phase Motor

AxiaVert Series & AEC Series

High Performance Cabinet Inverter and Regenerative Units

BENEFITS

- Reliable, balanced and robust
- Compliant with the most of the efficiency standards

- Modular system
- Wide power range
- Versatile Communication
- High mounting flexibility

FEATURES

- Power range: up to 355 kW
- Built in DC brakes
- Wide range of options
- Degree of protection up to IP56

- Selectable Functional safety features (up to SIL 3 / PL e / CAT. 4)
- Wide range of Encoder supports for various systems
- Customizable logic functions with internal optional PLC (IEC61131)
- Integrated PID control system
- Various Control modes incl. Position, Speed or Torque Control & CiA402-compatible Motion Control
- Easy wiring with detachable signal and power terminals (up to 15 kW)
- DC link connection for energy sharing
- Energy recovery braking (recovered electricity can be sent back to the grid)
- Energy consumption optimization (AEC/B)
- Mains unit (AEC/S)

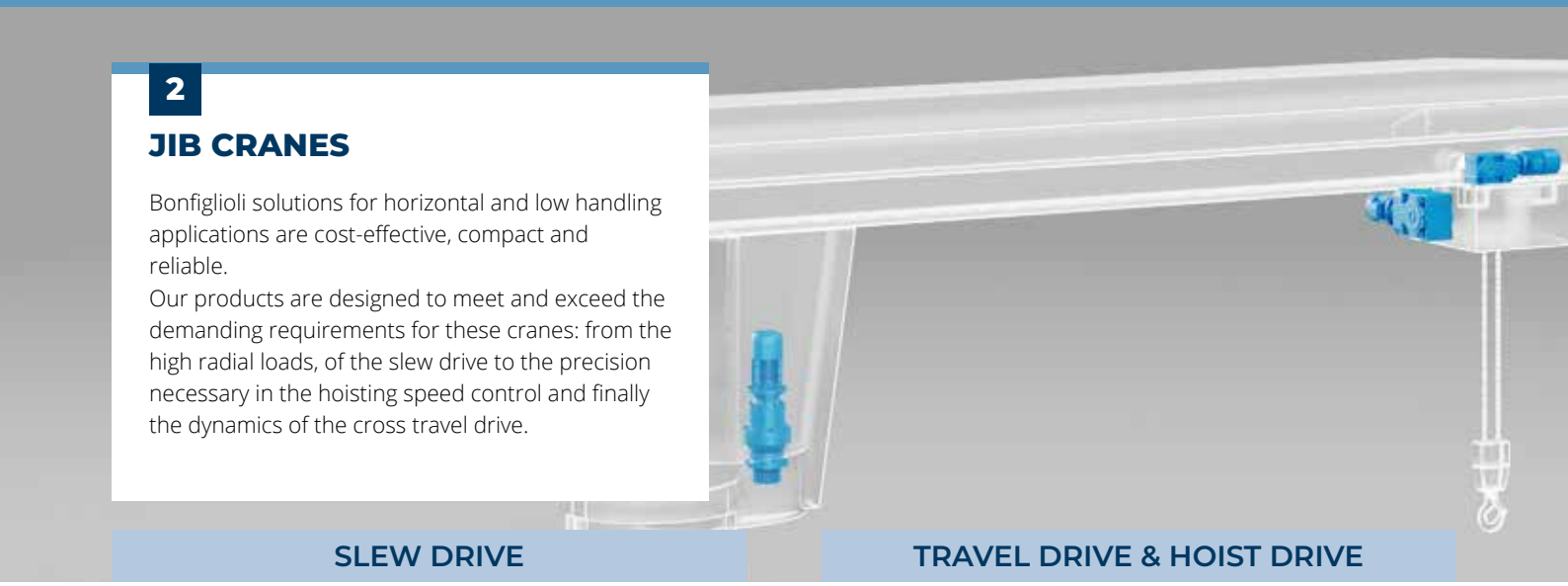

2

JIB CRANES

Bonfiglioli solutions for horizontal and low handling applications are cost-effective, compact and reliable.
Our products are designed to meet and exceed the demanding requirements for these cranes: from the high radial loads, of the slew drive to the precision necessary in the hoisting speed control and finally the dynamics of the cross travel drive.

SLEW DRIVE

300M Series

Planetary Gearbox

BENEFITS

- Robustness
- Reliability in harsh working conditions and wide range of temperature
- High torque density
- Modularity
- High overhung load capacity

FEATURES

- Widest range of ratios
- Easy to fit output pinion
- IEC or NEMA motor flange
- Wide range of motion control solutions
- Availability of different grades of protection

TRAVEL DRIVE & HOIST DRIVE

A Series

Helical Bevel Gearbox

- Reduced installation space
- Wide output speed range
- High stiffness for dynamic application
- Safe operation in potentially explosive atmospheres

- Shaft mounting with hollow shaft and torque arm or shrink disk
- Reinforced bearings available as an option
- Reduced backlash as an option

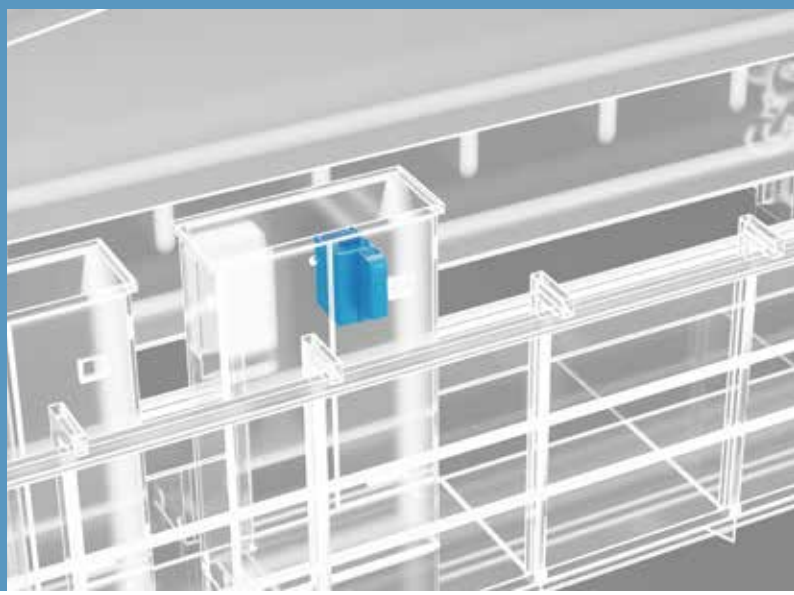

BX Series

Asynchronous Induction Phase Motor

AxiaVert Series & AEC Series

High Performance Cabinet Inverter and Regenerative Units

BENEFITS

- Reliable, balanced and robust
- Compliant with the most of the efficiency standards

- Modular system
- Wide power range
- Versatile Communication
- High mounting flexibility

FEATURES

- Power range: up to 355 kW
- Built in DC brakes
- Wide range of options
- Degree of protection up to IP56

- Selectable Functional safety features (up to SIL 3 / PL e / CAT. 4)
- Wide range of Encoder supports for various systems
- Customizable logic functions with internal optional PLC (IEC61131)
- Integrated PID control system
- Various Control modes incl. Position, Speed or Torque Control & CiA402-compatible Motion Control
- Easy wiring with detachable signal and power terminals (up to 15 kW)
- DC link connection for energy sharing
- Energy recovery braking (recovered electricity can be sent back to the grid)
- Energy consumption optimization (AEC/B)
- Mains unit (AEC/S)

OUR GLOBAL PRESENCE

Thanks to an international network of closely interconnected commercial and production sites, we can guarantee the same high standards of Bonfiglioli quality anywhere at any given time. We know that our direct presence in local markets is the key to long-lasting success, so our family includes 17 production sites, 23 commercial sites and more than 550 distributors around the world.

Our organization is always close by, offering complete and efficient solutions and supporting our customers with dedicated services, co-engineering and after-sales assistance.

17
PRODUCTION SITES

23
COMMERCIAL SITES

80
COUNTRIES

550
DISTRIBUTORS

~5,000
PEOPLE

BR_CAT_LOG_STD_ENG_R02_2

AUSTRALIA
Bonfiglioli Transmission (Aust.) Pty Ltd
2, Cox Place Glendenning NSW 2761
Locked Bag 1000 Plumpton NSW 2761
Tel. +61 2 8811 8000

BRAZIL
Bonfiglioli Redutores do Brasil Ltda
Av. Osvaldo Fregonezi, 171, cjs 31 e 44
CEP 09851-015 - São Bernardo do Campo
São Paulo
Tel. +55 11 4344 2322

CHINA
Bonfiglioli Drives (Shanghai) Co. Ltd.
#68, Hui-Lian Road, QingPu District,
201707 Shanghai
Tel. +86 21 6700 2000

Selcom Electronics (Shanghai) Co., Ltd
A7, No.5399, Waiqingsong Road, QingPu District,
201707 Shanghai
Tel. +86 21 6010 8100

A24, No.5399, Waiqingsong Road, QingPu District,
201707 Shanghai
Tel. +86 21 6010 8100

FRANCE
Bonfiglioli Transmission S.A.S.
14 Rue Eugène Pottier
Zone Industrielle de Moimont II
95670 Marly la Ville
Tel. +33 1 34474510

GERMANY
Bonfiglioli Deutschland GmbH
Sperberweg 12 - 41468 Neuss
Tel. +49 0 2131 2988 0

Bonfiglioli Deutschland GmbH
Europark Fichtenhain B6 - 47807 Krefeld
Tel. +49 0 2151 8396 0

O&K Antriebstechnik GmbH
Ruhrallee 8-12 - 45525 Hattingen
Tel. +49 0 2324 2050 1

INDIA
Bonfiglioli Transmission Pvt. Ltd.
Mobility & Wind Industries
AC 7 – 11, SIDCO Industrial Estate,
Thirumudivakkam
Kancheepuram - 600132 - Tamil Nadu
Tel. +91 844 844 8649

Industry & Automation Solutions
Survey No. 528/1, Perambakkam High Road
Mannur Village, Sriperumbudur Taluk
Kancheepuram - 602 105 - Tamil Nadu
Tel. +91 844 844 8649

Industry & Automation Solutions
Plot No E-5/2, Badhalwadi
Talegaon MIDC Phase II,
Pune – 410 507 - Maharashtra
Tel. +91 844 844 8649

Bonfiglioli Drive Systems Pvt. Ltd.
Industry & Automation Solutions
No 50, Papparambakkam Road,
Mannur Village, Sriperumbudur Taluk,
Kancheepuram - 602105 - Tamil Nadu
Tel. +91 844 844 8649

ITALY
Bonfiglioli Riduttori S.p.A.
Industry & Automation Solutions
Via Cav. Clementino Bonfiglioli, 1
40012 Calderara di Reno
Tel. +39 051 6473111

Industry & Automation Solutions
Via Sandro Pertini, lotto 7b
20080 Carpiano
Tel. +39 02985081

Mobility & Wind Industries
Via Enrico Mattei, 12 Z.I. Villa Selva
47122 Forlì
Tel. +39 0543 789111

Industry & Automation Solutions
Via Unione, 49 - 38068 Rovereto
Tel. +39 0464 443435/36

Selcom Group S.p.A.
Via Achille Grandi, 5
40013 Castel Maggiore (BO)
Tel. +39 051 6387111

Via Marino Serenari, 18
40013 Castel Maggiore (BO)
Tel. +39 051 6387111

Via Cadriano, 19
40057 Cadriano (BO)
Tel. +39 051 6387111

NEW ZEALAND
Bonfiglioli Transmission (Aust.) Pty Ltd
88 Hastie Avenue, Mangere Bridge,
2022 Auckland
PO Box 11795, Ellerslie
Tel. +64 09 634 6441

SINGAPORE
Bonfiglioli South East Asia Pte Ltd
8 Boon Lay Way, #04-09,
8@ Tadehub 21, Singapore 609964
Tel. +65 6268 9869

SLOVAKIA
Bonfiglioli Slovakia s.r.o.
Robotnícka 2129
Považská Bystrica, 01701 Slovakia
Tel. +421 42 430 75 64

SOUTH AFRICA
Bonfiglioli South Africa Pty Ltd.
55 Galaxy Avenue, Linbro Business Park,
Sandton, Johannesburg
2090 South Africa
Tel. +27 11 608 2030

SPAIN
Tecnotrans Bonfiglioli S.A
Avinguda del Ferrocarril, n° 14,
Polígono Industrial Can Estapé
08755 Castellbisbal - Barcelona
Tel. +34 93 447 84 00

TURKEY
Bonfiglioli Türkiye Jsc
Atatürk Organize Sanayi Bölgesi,
10007 Sk. No. 30
Atatürk Organize Sanayi Bölgesi,
35620 Çiğli - Izmir
Tel. +90 0 232 328 22 77

UNITED KINGDOM
Bonfiglioli UK Ltd.
Unit 1 Calver Quay, Calver Road, Winwick
Warrington, Cheshire - WA2 8UD
Tel. +44 1925 852667

USA
Bonfiglioli USA Inc.
3541 Hargrave Drive
Hebron, Kentucky 41048
Tel. +1 859 334 3333

VIETNAM
Bonfiglioli Vietnam Co. Ltd.
Lot C-9D-CN, My Phuoc 3 Industrial Park,
Thoi Hoa ward, Ben Cat city, Binh Duong
province, Vietnam
Tel. +84 274 3577411

PRODUCTION ASSEMBLY SALES SERVICE

We have a relentless commitment to excellence, innovation & sustainability. Our team creates, distributes and services world-class power transmission & drive solutions to keep the world in motion.

HEADQUARTERS

Bonfiglioli S.p.A
Via Cav. Clementino Bonfiglioli, 1
40012 Calderara di Reno - Bologna (Italy)
Tel. +39 051 6473111